Series 57

Innovative. Intuitive and modern.

https://eao.com/57

57 Information about the Series

Key advantages

- First choice to fully comply with EN 14752
- User friendly, extra large operating area of Ø 74 mm
- Two unique, illuminated feedback rings
- Conform to TSI PRM
- Robust, raised front bezel prevents unintended activation
- Coherent look and feel of the entire Series 57
- Integrated finding tone
- High IP69K front protection
- Optional illumination functions
- Smart final mounting

Typical application areas

- Passenger access systems
- Passenger information systems
- Call for aid terminals
- Emergency and emergency call systems
- Toilet facilities on trains and buses
- Lifting and moving systems
- Access control systems

Functions

- Indicator
- Door opening pushbutton
- Call for aid pushbutton
- Warning indicator

Design

- Front mounting
- Rear mounting
- Glass mounting

IP front protection

- IP69K

Raitings

- max. 250 mA

Mounting cut-outs

- Ø 42 mm

Terminal

- Cable with plug-in connection

Lens Material

- Aluminium
- Plastic

Markings

- Milling
- Injected in plastic

Approvals

- CCC
- E1 Regulation No. 10
- E1 118RII
- TSI PRM (EBC)

Conformities

- CE
- 2014/30/EU (EMC)
- 1300/2014/EU (TSI PRM)
- 2011/65/EU (RoHS)

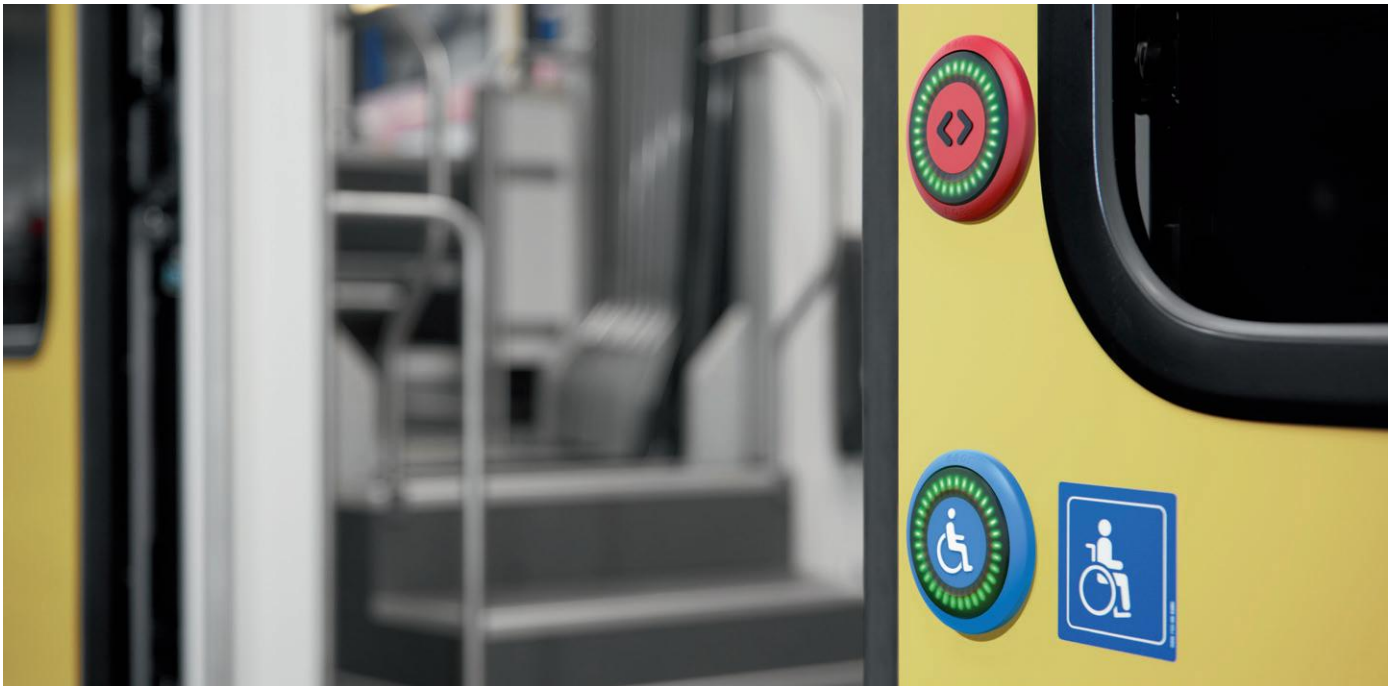

Overview

57 Front mounting

Single side pushbutton

The preview is based on a sample product. This can differ from your current configuration.

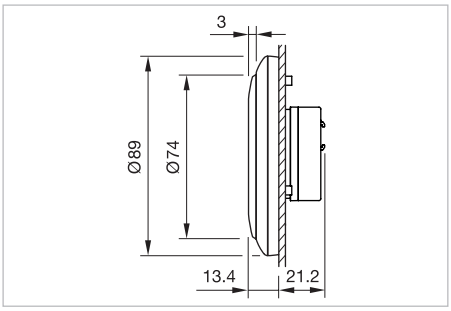

Dimensions [mm]

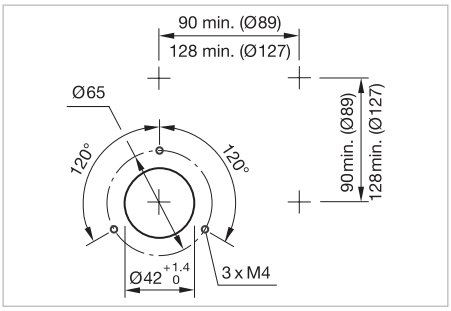

Mounting cut-outs [mm]

General information

- User friendly, extra large operating area of Ø 74 mm
- Illuminable feedback rings; outer ring green and inner ring red
- Tri-Colour option; two additional lighting points in the outer ring. Two of the three colours can be controlled simultaneously.
- Raised symbols conform to TSI PRM
- Integrated optional finding tone for visually impaired persons (except Tri-Colour)
- Cable and front bezel are available as single parts
- Please complete a separate order form at www.eao.com/downloads and deliver it to your local EAO distributor
- Part No. 57-10-xxxxxx (with cable)
  Part No. 57-100-xxxxxx (without cable)

Equipment consisting of

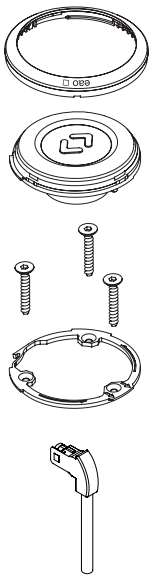

Front bezel

Switching unit

Fixing ring

Cable

Front bezel			
plastic, colour similar RAL		aluminium	without
☐ green RAL 6032	☐ red RAL 3000	☐ natural anodized	☐
☐ blue RAL 5015	☐ yellow RAL 1023		
☐ grey RAL 7040	☐ black RAL 9017		
☐ night blue RAL 5022			

Symbol insert		
plastic, colour similar RAL		aluminium
☐ green RAL 6032	☐ red RAL 3000	☐ natural anodized
☐ blue RAL 5015	☐ yellow RAL 1023	
☐ grey RAL 7040	☐ night blue RAL 5022 (wheelchair)	

Symbol/Symbol colour similar RAL

☐ Symbol plastic
☐ Symbol aluminium, natural anodized

			
☐ black RAL 9017	☐ black RAL 9017	☐ black RAL 9017	☐ black RAL 9017 ☐ white RAL 9003

☐ Symbol aluminium, natural anodized

			
☐ black RAL 9017	☐ black RAL 9017	☐ black RAL 9017	☐ black RAL 9017

	
☐ white RAL 9003	☐ white RAL 9003

			
☐ yellow RAL 1023 ☐ black RAL 9017	☐ black RAL 9017	☐ black RAL 9017	☐ black RAL 9017

Finding tone	
☐ standard 65 dB (A)	☐ without

Tri-Colour	
☐ standard yellow	☐ without

Supply voltage		
☐ 16 – 63 VDC	☐ 50 – 143 VDC	☐ 16.8 – 143 VDC (min./max.), Tri-Colour

Cable exit			
☐ cable exit left	☐ cable exit right	☐ cable exit top	☐ cable exit bottom
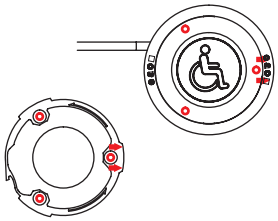	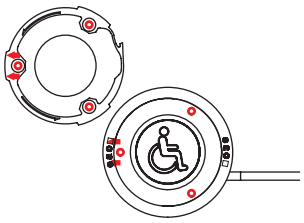	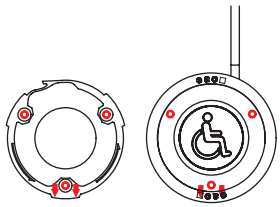	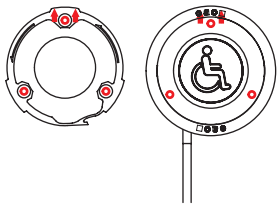

Cable length				
☐ A = 200 mm	☐ A = 1000 mm	☐ A = 2000 mm	☐ _____ mm	☐ without cable

Cable and Connector type					
Cable	Wiring diagram	Connector	Connector pin assignment		
☐ 4 x 0.24 mm²	3, 4	☐ Core end-sleeves		☐ standard	☐ special
☐ 4 x 0.50 mm²	3, 4	☐ AMP MATE-N-LOK 794805-1 (4P)	1	Pin 1	___
☐ 6 x 0.24 mm²	1, 2, 5, 6	☐ AMP MATE-N-LOK 794895-1 (6P)	2	Pin 2	___
☐ 6 x 0.50 mm²	1, 2, 5, 6	☐ WAGO X-COM 769	3	Pin 3	___
		☐ AMP FASTIN-FASTON 180901 (4P)	4	Pin 4	___
		☐ DEUTSCH DT04-4P-C015 (4P)	5	Pin 5	___
		☐ DEUTSCH DT04-6P-C015 (6P)	6	Pin 6	___

Finding tone	Number of strands	Wiring diagram according to EN 14752
X	6	VDC = 16 - 63VDC/50 - 143VDC 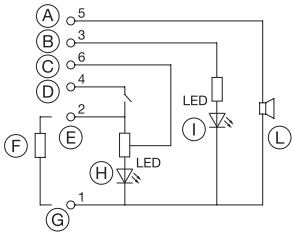
Wiring diagram 1		
X	4	VDC = 16 - 63VDC/50 - 143VDC 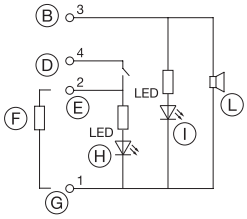
Wiring diagram 3		

Finding tone	Number of strands	Wiring diagram according to EN 14752
–	6	VDC = 16 - 63VDC/50 - 143VDC 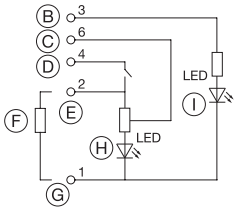
Wiring diagram 2		
–	4	VDC = 16 - 63VDC/50 - 143VDC 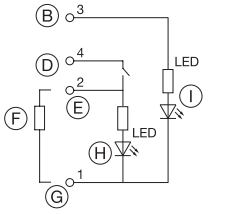
Wiring diagram 4		

57 Front mounting

Finding tone	Number of strands	Wiring diagram as per EN 14752
X	6	VDC = 16 - 63VDC/50 - 143VDC 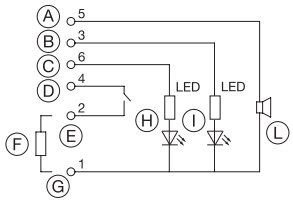
Wiring diagram 5		
–	6	VDC = 16.8 - 143VDC 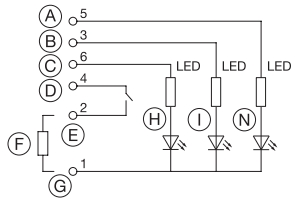
Wiring diagram 7, Tri-Colour		

Finding tone	Number of strands	Wiring diagram as per EN 14752
–	5	VDC = 16 - 63VDC/50 - 143VDC 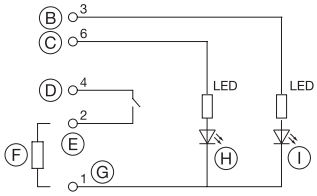
Wiring diagram 6		

Legend

A = VDC finding tone
B = VDC outer ring
C = VDC inner ring
D = VDC
E = Switch (not potential-free)
F = Load (max. 250 mA)
G = 0 V
H = Inner ring
I = Outer ring
L = Finding tone
N = Lighting points

Indicator

Equipment consisting of


Front bezel


Illumination unit

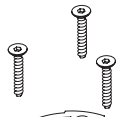
Fixing ring

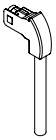
Cable

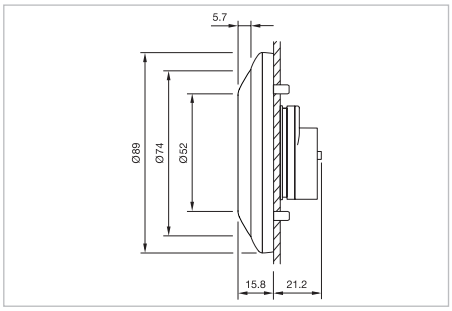

Dimensions [mm]

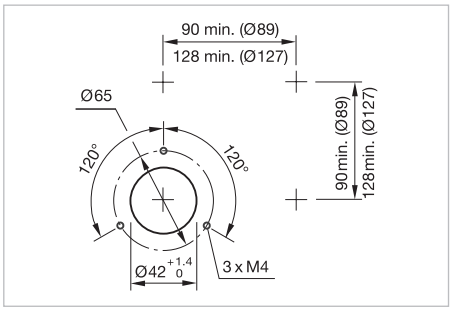

Mounting cut-outs [mm]

The preview is based on a sample product. This can differ from your current configuration.

General information

- Extra large illuminated surface, Ø 52 mm
- LEDs ensure an optimal illumination
- Cable and front bezel are available as single parts
- Please complete a separate order form at www.eao.com/downloads and deliver it to your local EAO distributor
- Part No. 57-60-xxxxxx (with cable)
  Part No. 57-600-xxxxxx (without cable)

Front bezel

plastic, colour similar RAL		aluminium	without
☐ green RAL 6032	☐ red RAL 3000	☐ natural anodized	☐
☐ blue RAL 5015	☐ yellow RAL 1023		
☐ grey RAL 7040	☐ black RAL 9017		
☐ night blue RAL 5022			

Symbols

☐ 	☐ DOOR LOCKED	☐ kg	☐ DOOR OUT OF ORDER	☐ TOILET ENGAGED	☐ WC Defekt	☐ DOOR OUT OF USE	☐ USE OTHER DOOR
☐ Door Not In Use	☐ 	☐ 	☐ DOOR OUT OF SERVICE	☐ Door not in use	☐ 	☐ 	☐ HORS SERVICE
☐ OCCUPÉ	☐ LIBRE	☐ 	☐ WC	☐ Door out of order	☐		

Illumination

Single colour			Bi-colour		
☐ red	☐ yellow	☐ green	☐ red/yellow	☐ red/green	☐ blue/white
☐ blue	☐ white				

57 Front mounting

Optional lighting effects	
☐ No	☐ Yes

With optional light effect functions				
PIN 2	☐ Red	☐ Flashing frequency	☐ 0.0 Hz Constant lighting	Wiring diagram
	☐ Yellow		☐ 0.2 Hz	1 – 4
	☐ Green		☐ 0.5 Hz	3, 4
	☐ Blue		☐ 1.0 Hz	3, 4
	☐ White		☐ 2.5 Hz	3, 4
	(Please advise one colour)	☐ Brightness	☐ 50 %	1 – 4
			☐ 100 %	1 – 4
PIN 3	☐ Red	☐ Flashing frequency	☐ 0.0 Hz Constant lighting	1 – 4
	☐ Yellow		☐ 0.2 Hz	3, 4
	☐ Green		☐ 0.5 Hz	3, 4
	☐ Blue		☐ 1.0 Hz	3, 4
	☐ White		☐ 2.5 Hz	3, 4
	(Please advise one colour)	☐ Brightness	☐ 50 %	1 – 4
			☐ 100 %	1 – 4
PIN 4	☐ Red	☐ Flashing frequency	☐ 0.0 Hz Constant lighting	1 – 4
	☐ Yellow		☐ 0.2 Hz	3, 4
	☐ Green		☐ 0.5 Hz	3, 4
	☐ Blue		☐ 1.0 Hz	3, 4
	☐ White		☐ 2.5 Hz	3, 4
	(Please advise one colour)	☐ Brightness	☐ 50 %	1 – 4
			☐ 100 %	1 – 4

Note: Total up to 3 lighting effects available per indicator, please see «Illumination».

Supply voltage	
☐ 24 VDC	☐ 110 VDC

Tolerance +30 % … –30 %

Cable exit			
☐ cable exit left	☐ cable exit right	☐ cable exit top	☐ cable exit bottom
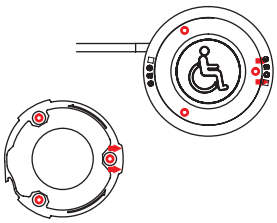	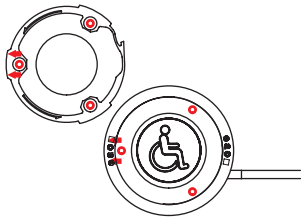	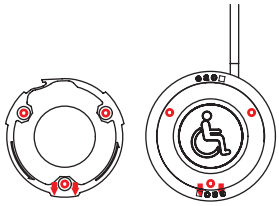	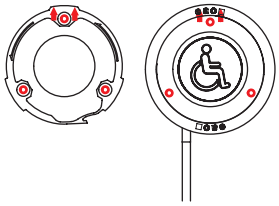

Cable length				
☐ A = 200 mm (standard)	☐ A = 1000 mm	☐ A = 2000 mm	☐ _____ mm	☐ without cable

Cable and Connector type					
Cable	Wiring diagram	Connector	Connector pin assignment		
☐ 2 x 0.50 mm²	1	☐ Core end-sleeves		☐ standard	☐ special
☐ 4 x 0.50 mm²	2, 3, 4	☐ AMP MATE-N-LOK 794894-1 (2P)	1	Pin 1	___
		☐ AMP MATE-N-LOK 794805-1 (4P)	2	Pin 2	___
		☐ WAGO X-COM 769	3	Pin 3	___
		☐ AMP FASTIN-FASTON 180901 (4P)	4	Pin 4	___
		☐ DEUTSCH DT04-4P-C015 (4P)			
		☐ DEUTSCH DT04-6P-C015 (6P)			

Single-colour, no lighting effects (constant lighting)	Bi-colour, no lighting effects (constant lighting)
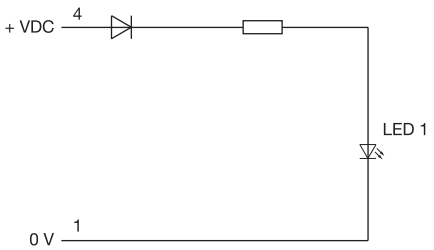 Wiring diagram 1	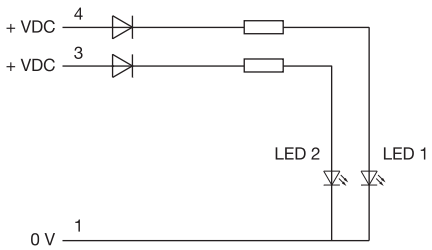 Wiring diagram 2

Single-colour, with lighting effects	Bi-colour, with lighting effects
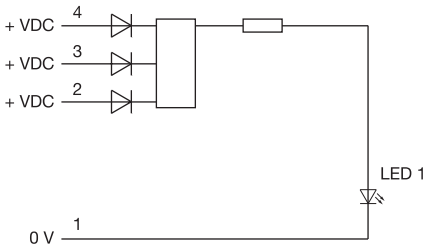 Wiring diagram 3	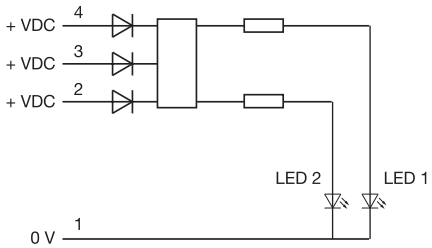 Wiring diagram 4

57 Front mounting

Warning indicator

The preview is based on a sample product. This can differ from your current configuration.

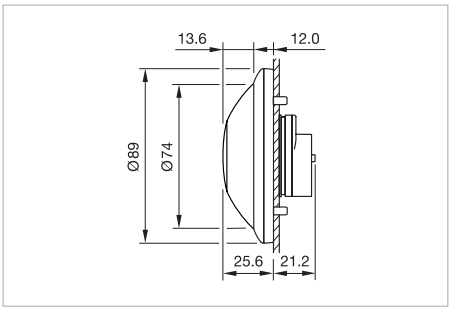

Dimensions [mm]

General information

- Extra large illuminated lens, Ø 74 mm
- LEDs ensure an optimal illumination
- Cable and front bezel are available as single parts
- Please complete a separate order form at www.eao.com/downloads and deliver it to your local EAO distributor
- Part No. 57-50-xxxxxx (with cable)
  Part No. 57-500-xxxxxx (without cable)

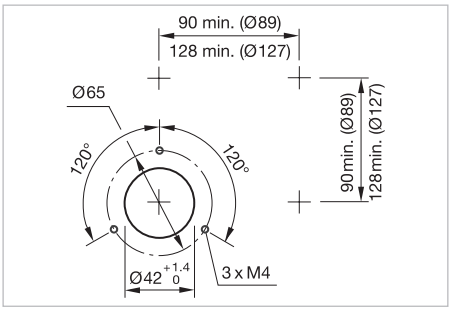

Mounting cut-ots [mm]

Equipment consisting of

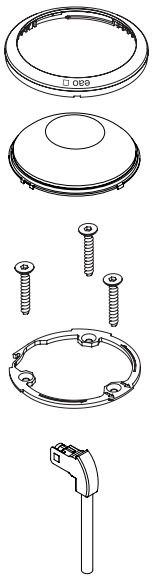

Front bezel

Illumination unit

Fixing ring

Cable

Front bezel			
plastic, colour similar RAL		aluminium	without
☐ green RAL 6032	☐ red RAL 3000	☐ natural anodized	☐
☐ blue RAL 5015	☐ yellow RAL 1023		
☐ grey RAL 7040	☐ black RAL 9017		
☐ night blue RAL 5022			

Illumination			
☐ red	☐ blue	☐ yellow	☐ green

Supply voltage	
☐ 24 VDC	☐ 110 VDC

Tolerance +30 % … –30 %

Cable exit			
☐ cable exit left	☐ cable exit right	☐ cable exit top	☐ cable exit bottom
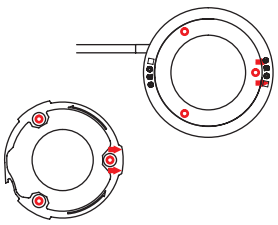	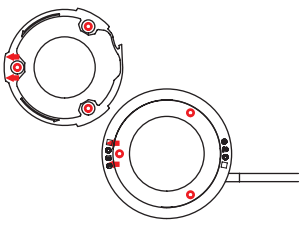	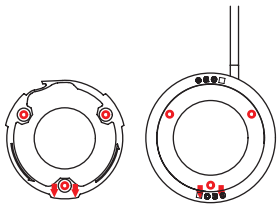	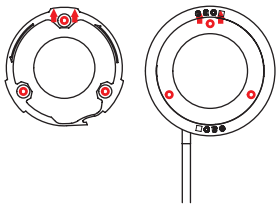

Cable length				
☐ A = 200 mm	☐ A = 1000 mm	☐ A = 2000 mm	☐ _____ mm	☐ without cable

Cable and Connector type					
Cable	Wiring diagram	Connector	Connector pin assignment		
☐ 2 x 0.50 mm²	1	☐ Core end-sleeves		☐ standard	☐ special
		☐ AMP MATE-N-LOK 794894-1 (2P)	1	Pin 1	___
		☐ WAGO X-COM 769	4	Pin 4	___
		☐ DEUTSCH DT04-2P-C015 (2P)			

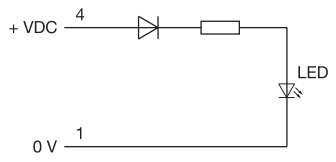

Wiring diagram 1

57 Front mounting

Multi-Tone Warning Indicator

The preview is based on a sample product. This can differ from your current configuration.

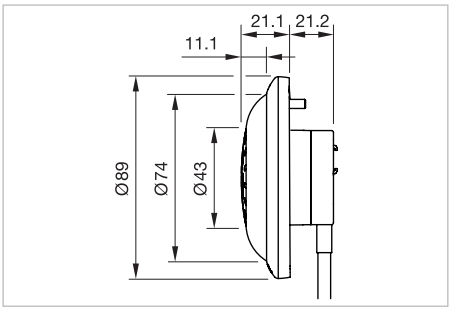

Dimensions [mm]

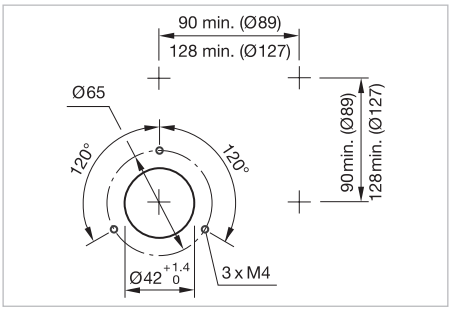

Mounting cut-outs [mm]

General information

- Audible and visual warning in a single device
- 3-tone sequences module with manual volume or passive loudspeaker
- The description of the standard tones can be found in the «Application guidelines».
- A single cable for two functions, space-saving and low mounting costs
- Extra large illuminated lens, Ø 74 mm
- Reliable LEDs ensure an optimum illumination
- Cable and front bezel are available as single parts
- Please complete a separate order form and 3-tone editor at www.eao.com/downloads and deliver it to your local EAO distributor
- Part No. 57-70-xxxxxx (with cable)
  Part No. 57-700-xxxxxx (without cable)

Equipment consisting of

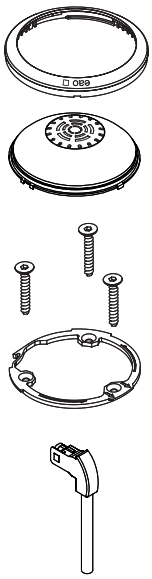

Front bezel

Front cap with Tone / illumination unit

Fixing ring

Cable

Front bezel			
plastic, colour similar RAL		aluminium	without
☐ green RAL 6032	☐ red RAL 3000	☐ natural anodized	☐
☐ blue RAL 5015	☐ yellow RAL 1023		
☐ grey RAL 7040	☐ black RAL 9017		
☐ night blue RAL 5022			

Illumination					
Single colour				Bi-Colour	
☐ red	☐ blue	☐ yellow	☐ white	☐ red/yellow	☐ red/green

Supply voltage
☐ 24 VDC
Tolerance –30 % … +25 %

Front cap
plastic, colour similar RAL
☐ black RAL 9017

Front cap marking	
☐ without symbol	☐ with symbol

Volume adjustment	
☐ Manual 3-tone sequences module	☐ Passive loudspeaker

Cable exit			
☐ cable exit left	☐ cable exit right	☐ cable exit top	☐ cable exit bottom
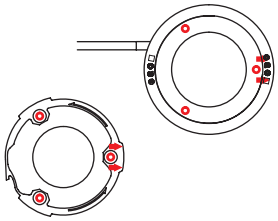	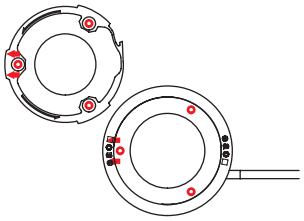	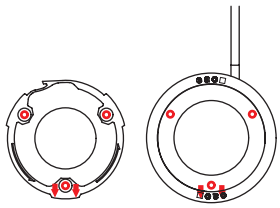	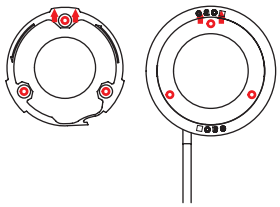

Cable length				
☐ A = 200 mm	☐ A = 1000 mm	☐ A = 2000 mm	☐ _____ mm	☐ without cable

Cable and Connector type					
Cable	Wiring diagram	Connector	Connector pin assignment		
☐ 6 x 0.24 mm²	1, 2, 3, 4	☐ Core end-sleeves	strand	☐ standard	☐ special
☐ 6 x 0.50 mm²	1, 2, 3, 4	☐ AMP MATE-N-LOK 794895-1 (6P)	1	Pin 1	___
		☐ WAGO X-COM 769-106	2	Pin 2	___
		☐ DEUTSCH DT04-6P-C015 (6P)	3	Pin 3	___
		☐ M8x1 (0,24 mm²)	4	Pin 4	___
			5	Pin 5	___
			6	Pin 6	___

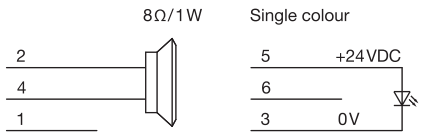

Wiring diagram 1 (passive speaker)

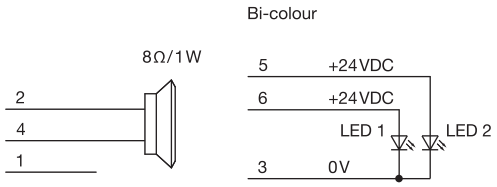

Wiring diagram 2 (passive speaker)

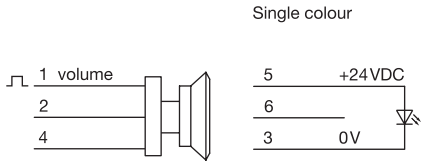

pin	tone sequence 1	2	3
4	+24 VDC	0V	+24 VDC
2	0V	+24 VDC	+24 VDC

Wiring diagram 3 (3-tone sequence)

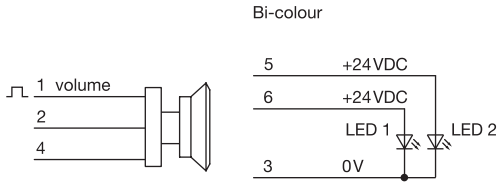

pin	tone sequence 1	2	3
4	+24 VDC	0V	+24 VDC
2	0V	+24 VDC	+24 VDC

Wiring diagram 4 (3-tone sequence)

57 Front mounting

Multi-Legend Display

The preview is based on a sample product. This can differ from your current configuration.

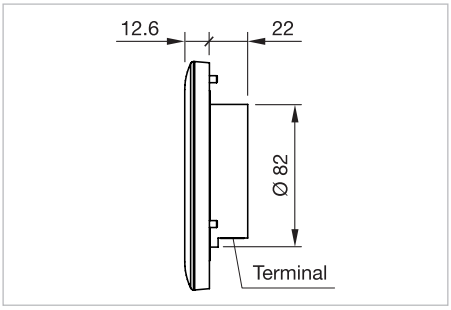

Dimensions [mm]

General information

- Extra large screen area, 77 mm
- 3.0" TFT display
- Terminal WAGO 713-1428/037-000
- Operating voltage 24 VDC
- Integrated sensor for brightness adaptation
- Up to 18 customised symbols per display with the programming kit for Multi-Legend Display 57-9902
- Part No. 57-800-000000 (17 standard symbols pre-installed)

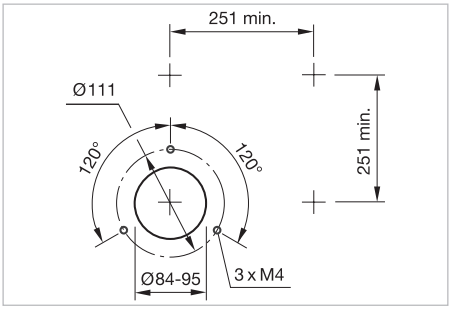

Mounting cut-outs [mm]

Equipment consisting of

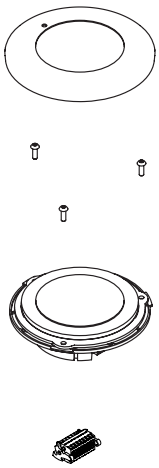

Multi-Legend Display, Frontdimension 131 mm

Symbols	Front bezel colour	Colour similar RAL	Part No.	Com-ponent layout
	Grey (Basalt grey)	RAL 7012	57-800-000000	108

Wiring diagrams

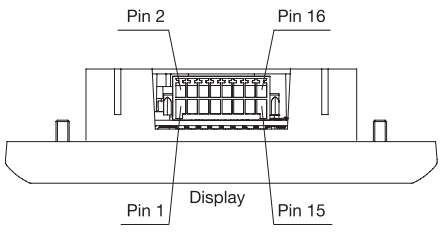

Wiring diagram 108

Pin	Description
1	GND 0VDC
2	GND 0VDC
3	24 VDC
4	24 VDC
5	Digital Input 0
6	Digital Input 1
7	Digital Input 2

Pin	Description
8	Digital Input 3
9	Digital Input 4 (not in use)
10	Digital Input 5 (not in use)
11	Not Connected
12	Not Connected

Pin	Description
13	Service Interface (locked)
14	Service Interface (locked)
15	Alert 1
16	Alert 2

Configuration

IN 0 Pin 5	IN 1 Pin 6	IN 2 Pin 7	IN 3 Pin 8	Alarm 1 Pin 15	Alarm 2 Pin 16	Display
0	0	0	0	0	0	No picture
1	0	0	0	0	0	1. Customer picture
0	1	0	0	0	0	2. Customer picture
1	1	0	0	0	0	3. Customer picture
0	0	1	0	0	0	4. Customer picture
1	0	1	0	0	0	5. Customer picture
0	1	1	0	0	0	6. Customer picture
1	1	1	0	0	0	7. Customer picture
0	0	0	1	0	0	8. Customer picture
1	0	0	1	0	0	9. Customer picture
0	1	0	1	0	0	10. Customer picture
1	1	0	1	0	0	11. Customer picture
0	0	1	1	0	0	12. Customer picture
1	0	1	1	0	0	13. Customer picture
0	1	1	1	0	0	14. Customer picture
1	1	1	1	0	0	15. Customer picture
x	x	x	x	1	0	1. Alarm picture
x	x	x	x	0	1	2. Alarm picture
x	x	x	x	1	1	3. Alarm picture

57 Front mounting

Call for aid pushbutton

Product can differ from the current configuration.

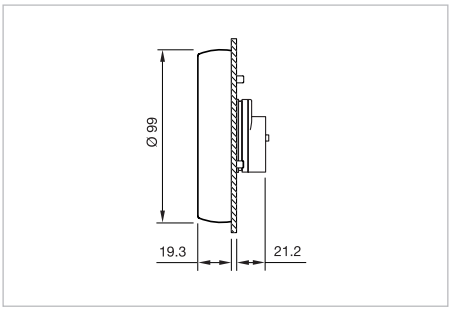

Dimensions [mm]

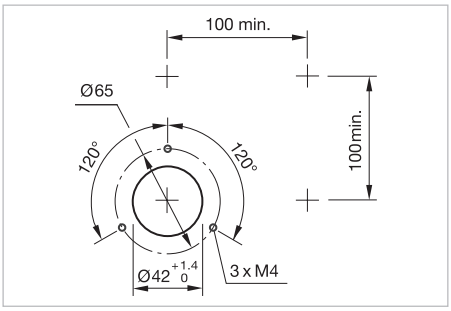

Mounting cut-outs [mm]

Equipment consisting of

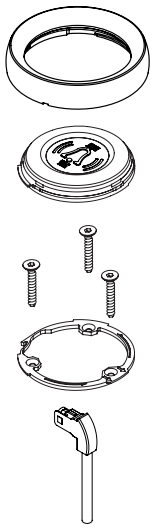

- Front bezel
- Switching unit
- Fixing ring
- Cable

General information

- User friendly, extra large operating area of Ø 74 mm
- Illuminable feedback rings; outer ring green and inner ring red or yellow/yellow
- Raised bell symbol conform to TSI PRM
- Integrated optional finding tone for visually impaired persons
- Robust front bezel raised protects against accidental actuation
- Warning triangle available as accessory
- Please complete a separate order form at www.eao.com/downloads and deliver it to your local EAO distributor
- Part No. 57-10-xxxxxx (with cable)
  Part No. 57-100-xxxxxx (without cable)

Front bezel				
Plastic flush, colour similar RAL		Aluminium safety, colour similar RAL		
☐ green RAL 6032	☐ yellow RAL 1023	☐ red anodized, RAL 3000	☐ green anodized, RAL 6032	☐ yellow anodized, RAL 1023

Symbol insert				
Symbol lastic, colour similar RAL			Symbol aluminium, colour similar RAL	
red RAL 3000	green RAL 6032	yellow RAL 1023	red anodized, RAL 3000	natural anodized
				
☐ white RAL 9003	☐ white RAL 9003	☐ white RAL 9003	☐ black RAL 9017	☐ black RAL 9017

Supply voltage
☐ 16 – 63 VDC

Finding tone	
☐ standard 65 dB (A)	☐ without

Illuminable feedback rings	
☐ Outer ring green/Inner ring red	☐ Outer ring yellow/Inner ring yellow

Cable length				
☐ A = 200 mm (standard)	☐ A = 1000 mm	☐ A = 2000 mm	☐ _____ mm	☐ without cable

Cable exit			
☐ cable exit left	☐ cable exit right	☐ cable exit top	☐ cable exit bottom
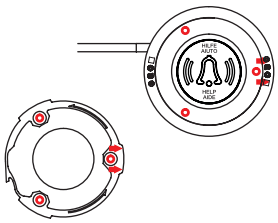	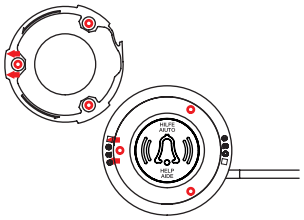	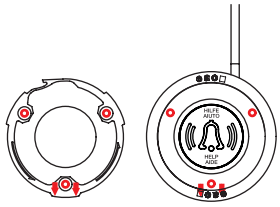	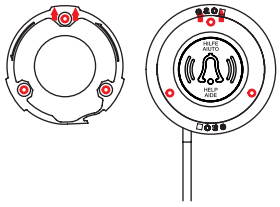

Cable and Connector type					
Cable	Wiring diagram	Connector	Connector pin assignment		
☐ 4 x 0.24 mm²	3, 4	☐ Core end-sleeves		☐ standard	☐ special
☐ 4 x 0.50 mm²	3, 4	☐ AMP MATE-N-LOK 794805-1 (4P)	1	Pin 1	___
☐ 6 x 0.24 mm²	1, 2, 5, 6	☐ AMP MATE-N-LOK 794895-1 (6P)	2	Pin 2	___
☐ 6 x 0.50 mm²	1, 2, 5, 6	☐ WAGO X-COM 769	3	Pin 3	___
		☐ AMP FASTIN-FASTON 180901 (4P)	4	Pin 4	___
		☐ DEUTSCH DT04-4P-C015 (4P)	5	Pin 5	___
		☐ DEUTSCH DT04-6P-C015 (6P)	6	Pin 6	___

Finding tone	Number of strands	Wiring diagram
X	6	VDC = 16 - 63VDC/50 - 143VDC 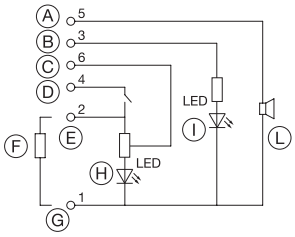
Wiring diagram 1		
X	4	VDC = 16 - 63VDC/50 - 143VDC 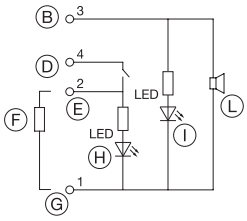
Wiring diagram 3		
X	6	VDC = 16 - 63VDC/50 - 143VDC 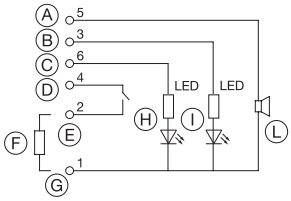
Wiring diagram 5		

Finding tone	Number of strands	Wiring diagram
–	6	VDC = 16 - 63VDC/50 - 143VDC 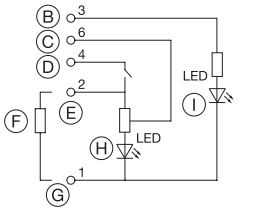
Wiring diagram 2		
–	4	VDC = 16 - 63VDC/50 - 143VDC 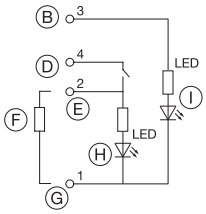
Wiring diagram 4		
–	5	VDC = 16 - 63VDC/50 - 143VDC 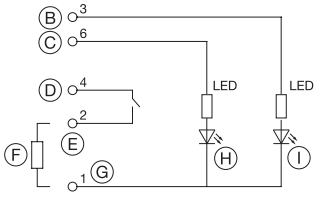
Wiring diagram 6		

Legende

A = VDC finding tone
B = VDC outer ring
C = VDC inner ring
D = VDC
E = Switch (not potential-free)
F = Load (max. 250 mA)
G = 0 V
H = Inner ring
I = Outer ring
L = Finding tone

57 Glass mounting

Single side pushbutton

The preview is based on a sample product. This can differ from your current configuration.

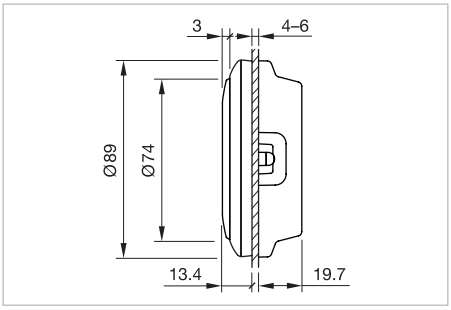

Dimensions [mm]

General information

- User friendly, extra large operating area of Ø 74 mm
- For glas thickness 4 – 6 mm
- Illuminable feedback rings; outer ring green and inner ring red
- Raised symbols conform to TSI PRM
- Integrated optional finding tone for visually impaired persons
- Cable, cable cover and front bezel are available as single parts
- Please complete a separate order form at www.eao.com/downloads and deliver it to your local EAO distributor
- Part No. 57-11-xxxxxx (with cable)
  Part No. 57-110-xxxxxx (without cable)

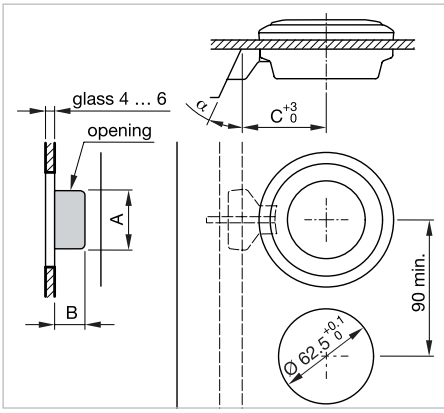

Mounting cut-outs [mm]

Equipment consisting of

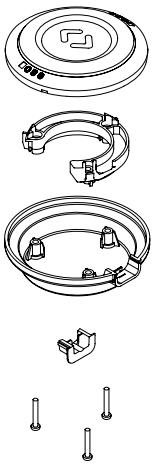

Front bezel/
Switching unit

Positioning aid

Cover

Cable cover

	α (°)	A (mm)	B (mm)	C (mm)
Cable cover standard	0	18 max.	11.5 max.	45
Cable cover standard 45°	45	18 max.	11.5 max.	45
Cable cover funnel 0°	0	24 max.	17.5 max.	57
Cable cover funnel 10°	10	24 max.	17.5 max.	57
Cable cover funnel 15°	15	24 max.	17.5 max.	57
Cable cover funnel 25°	25	24 max.	17.5 max.	57
Cable cover funnel 25° H24	25	24 max.	21.5 max.	62.5

Front bezel			
plastic, colour similar RAL		aluminium	without
☐ green RAL 6032	☐ red RAL 3000	☐ natural anodized with dismantling opening	☐
☐ blue RAL 5015	☐ yellow RAL 1023		
☐ grey RAL 7040	☐ black RAL 9017		
☐ night blue RAL 5022			

Symbol insert		
plastic, colour similar RAL		aluminium
☐ green RAL 6032	☐ red RAL 3000	☐ natural anodized
☐ blue RAL 5015	☐ yellow RAL 1023	
☐ grey RAL 7040	☐ night blue RAL 5022 (wheel chair)	

Symbol/Symbol colour similar RAL

☐ Symbol plastic
☐ Symbol aluminium, natural anodized

			
☐ black RAL 9017	☐ black RAL 9017	☐ black RAL 9017	☐ black RAL 9017 ☐ white RAL 9003

☐ Symbol aluminium, natural anodized

			
☐ black RAL 9017	☐ black RAL 9017	☐ black RAL 9017	☐ black RAL 9017

	
☐ white RAL 9003	☐ white RAL 9003

			
☐ yellow RAL 1023 ☐ black RAL 9017	☐ black RAL 9017	☐ black RAL 9017	☐ black RAL 9017

Finding tone

☐ standard 65 dB (A)	☐ without

Supply voltage

☐ 16 – 63 VDC	☐ 50 – 143 VDC

Cable exit (view from outside)

☐ cable exit left	☐ cable exit right	☐ cable exit top	☐ cable exit bottom
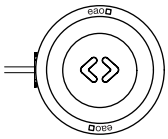	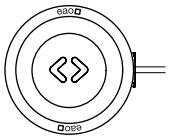	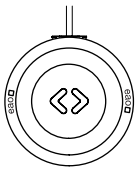	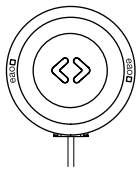

Cable cover

Standard

☐ 0°	☐ 45°
	

Funnel

☐ 0°	☐ 10°	☐ 15°	☐ 25°	☐ 25° H24
				

57 Glass mounting

Cable length				
☐ A = 200 mm (standard)	☐ A = 1000 mm	☐ A = 2000 mm	☐ _____ mm	☐ without cable

Cable and Connector type					
Cable	Wiring diagram	Connector	Connector pin assignment		
☐ 4 x 0.24 mm²	3, 4	☐ Core end-sleeves		☐ standard	☐ special
☐ 4 x 0.50 mm²	3, 4	☐ AMP MATE-N-LOK 794805-1 (4P)	1	Pin 1	___
☐ 6 x 0.24 mm²	1, 2, 5, 6	☐ AMP MATE-N-LOK 794895-1 (6P)	2	Pin 2	___
☐ 6 x 0.50 mm²	1, 2, 5, 6	☐ WAGO X-COM 769	3	Pin 3	___
		☐ AMP FASTIN-FASTON 180901 (4P)	4	Pin 4	___
		☐ DEUTSCH DT04-4P-C015 (4P)	5	Pin 5	___
		☐ DEUTSCH DT04-6P-C015 (6P)	6	Pin 6	___

Finding tone	Number of strands	Wiring diagram according to EN 14752
X	6	VDC = 16 - 63VDC/50 - 143VDC 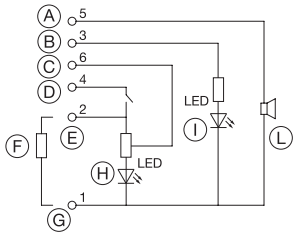
Wiring diagram 1		
X	4	VDC = 16 - 63VDC/50 - 143VDC 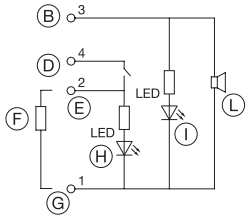
Wiring diagram 3		
X	6	VDC = 16 - 63VDC/50 - 143VDC 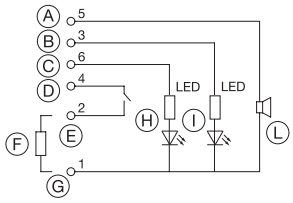
Wiring diagram 5		

Finding tone	Number of strands	Wiring diagram according to EN 14752
–	6	VDC = 16 - 63VDC/50 - 143VDC 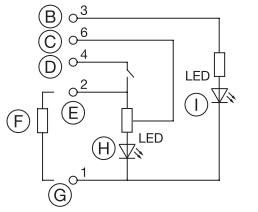
Wiring diagram 2		
–	4	VDC = 16 - 63VDC/50 - 143VDC 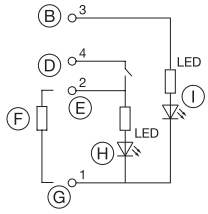
Wiring diagram 4		
–	5	VDC = 16 - 63VDC/50 - 143VDC 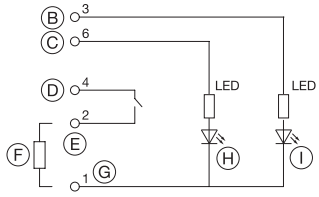
Wiring diagram 6		

Legend

A = VDC finding tone
B = VDC outer ring
C = VDC inner ring
D = VDC
E = Switch (not potential-free)
F = Load (max. 250 mA)
G = 0 V
H = Inner ring
I = Outer ring
L = Finding tone

Double side pushbutton

Musterabbildung kann von Ihrem ausgewählten Artikel abweichen.

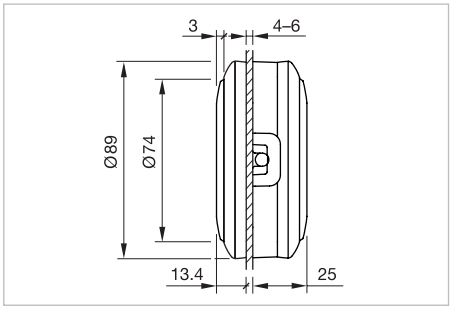

Dimensions [mm]

General information

- User friendly, extra large operating area of Ø 74 mm
- For glas thickness 4 – 6 mm
- Illuminable feedback rings; outer ring green and inner ring red
- Raised symbols conform to TSI PRM
- Integrated optional finding tone for visually impaired persons
- Cable cover and front bezel are available as single parts
- Please complete a separate order form at www.eao.com/downloads and deliver it to your local EAO distributor
- Part No. 57-12-xxxxxx (with cable)

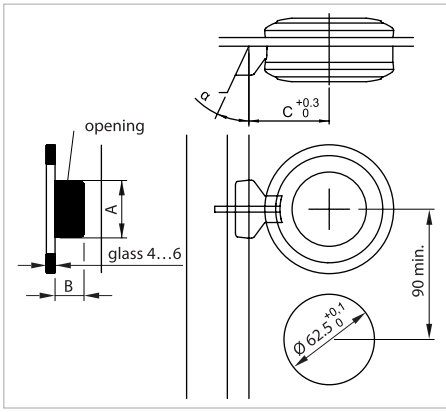

Mounting cut-outs [mm]

Equipment consisting of

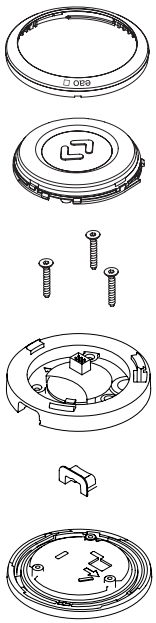

	α (°)	A (mm)	B (mm)	C (mm)
Cable cover standard	0	18 max.	11.5 max.	45
Cable cover standard 45°	45	18 max.	11.5 max.	45
Cable cover funnel 0°	0	24 max.	17.5 max.	57
Cable cover funnel 10°	10	24 max.	17.5 max.	57
Cable cover funnel 15°	15	24 max.	17.5 max.	57
Cable cover funnel 25°	25	24 max.	17.5 max.	57
Cable cover funnel 25° H24	25	24 max.	21.5 max.	62.5

Front bezel external		
Plastic, colour similar RAL		Aluminium natural anodized
☐ green RAL 6032	☐ red RAL 3000	☐ with dismantling opening
☐ blue RAL 5015	☐ yellow RAL 1023	☐ without dismantling opening
☐ grey RAL 7040	☐ black RAL 9017	
☐ night blue RAL 5022		

Front bezel internal		
Plastic, colour similar RAL		Aluminium
☐ green RAL 6032	☐ red RAL 3000	☐ natural anodized
☐ blue RAL 5015	☐ yellow RAL 1023	
☐ grey RAL 7040	☐ black RAL 9017	
☐ night blue RAL 5022		

Symbol insert external		
Plastic, colour similar RAL		Aluminium
☐ green RAL 6032	☐ red RAL 3000	☐ natural anodized
☐ blue RAL 5015	☐ yellow RAL 1023	
☐ grey RAL 7040	☐ black RAL 9017	
☐ night blue RAL 5022 (wheelchair)		

Symbol insert internal		
Plastic, colour similar RAL		Aluminium
☐ green RAL 6032	☐ red RAL 3000	☐ natural anodized
☐ blue RAL 5015	☐ yellow RAL 1023	
☐ grey RAL 7040	☐ black RAL 9017	
☐ night blue RAL 5022 (wheelchair)		

57 Glass mounting

Symbol/Symbol colour similar RAL, external			
☐ Symbol plastic ☐ Symbol aluminium, natural anodized			
 ☐ black RAL 9017	 ☐ black RAL 9017	 ☐ black RAL 9017	 ☐ black RAL 9017 ☐ white RAL 9003
 ☐ white RAL 9003	 ☐ white RAL 9003		
☐ Symbol Aluminium, natural anodized			
 ☐ black RAL 9017	 ☐ black RAL 9017	 ☐ black RAL 9017	 ☐ black RAL 9017
 ☐ yellow RAL 1023 ☐ black RAL 9017	 ☐ black RAL 9017	 ☐ black RAL 9017	 ☐ black RAL 9017

Symbol/Symbol colour similar RAL, internal			
☐ Symbol plastic ☐ Symbol aluminium, natural anodized			
 ☐ black RAL 9017	 ☐ black RAL 9017	 ☐ black RAL 9017	 ☐ black RAL 9017 ☐ white RAL 9003
 ☐ white RAL 9003	 ☐ white RAL 9003		
☐ Symbol Aluminium, natural anodized			
 ☐ black RAL 9017	 ☐ black RAL 9017	 ☐ black RAL 9017	 ☐ black RAL 9017
 ☐ yellow RAL 1023 ☐ black RAL 9017	 ☐ black RAL 9017	 ☐ black RAL 9017	 ☐ black RAL 9017

Finding tone external	
☐ standard 65 dB (A)	☐ without

Finding tone internal	
☐ standard 65 dB (A)	☐ without

Supply voltage	
☐ 16 – 63 VDC	☐ 50 – 143 VDC

Cable exit (view from outside)			
☐ cable exit left	☐ cable exit right	☐ cable exit top	☐ cable exit bottom
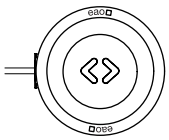	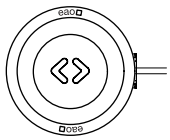	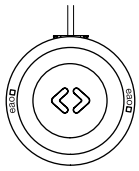	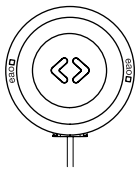

Cable cover				
Standard				
☐ 0° 	☐ 45° 			
Funnel				
☐ 0° 	☐ 10° 	☐ 15° 	☐ 25° 	☐ 25° H24 

Cable length			
☐ A = 200 mm	☐ A = 1000 mm	☐ A = 2000 mm	☐ _____ mm

Cable and Connector type					
Cable	Wiring diagram	Connector	Connector pin assignment		
☐ 4 x 0.24 mm²	3	☐ Core end-sleeves		☐ standard	☐ special
☐ 4 x 0.50 mm²	3	☐ AMP MATE-N-LOK 794805-1 (4P)	1	Pin 1	___
☐ 6 x 0.24 mm²	1, 2, 4	☐ AMP MATE-N-LOK 794895-1 (6P)	2	Pin 2	___
		☐ WAGO X-COM 769	3	Pin 3	___
		☐ AMP FASTIN-FASTON 180901 (4P)	4	Pin 4	___
		☐ DEUTSCH DT04-4P-C015 (4P)	5	Pin 5	___
		☐ DEUTSCH DT04-6P-C015 (6P)	6	Pin 6	___

Wiring diagram select by function		
Function	Cable	Wiring diagram
☐ Diagram six pole, switch parallel, LED outer ring separately, LED inner ring parallel , without finding tone	6 x 0.24 mm²	1
☐ Diagram six pole, switch separately, LED inner ring / outer ring parallel, without finding tone	6 x 0.24 mm²	2
☐ Diagram four pole, switch parallel, LED outer ring parallel, without finding tone	4 x 0.24 mm² 4 x 0.50 mm²	3
☐ Diagram six pole, switch parallel, LED inner ring / outer ring parallel, with finding tone	6 x 0.24 mm²	4

57 Glass mounting

Wiring diagram

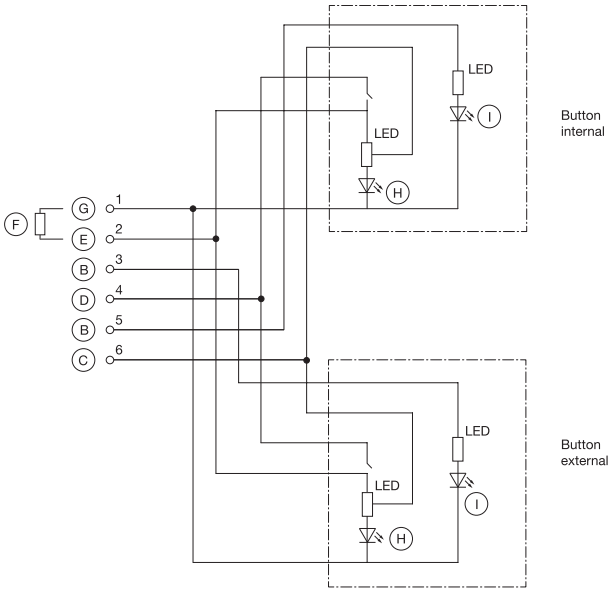

Wiring diagram 1

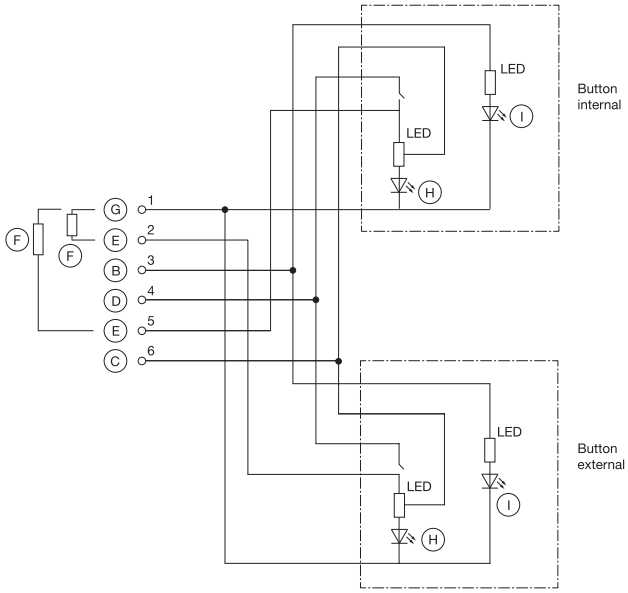

Wiring diagram 2

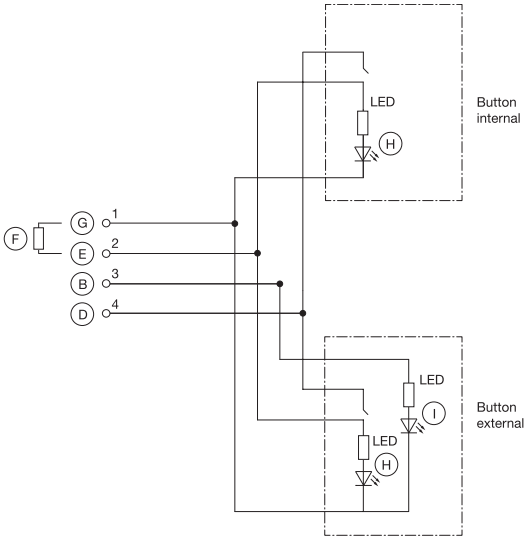

Wiring diagram 3

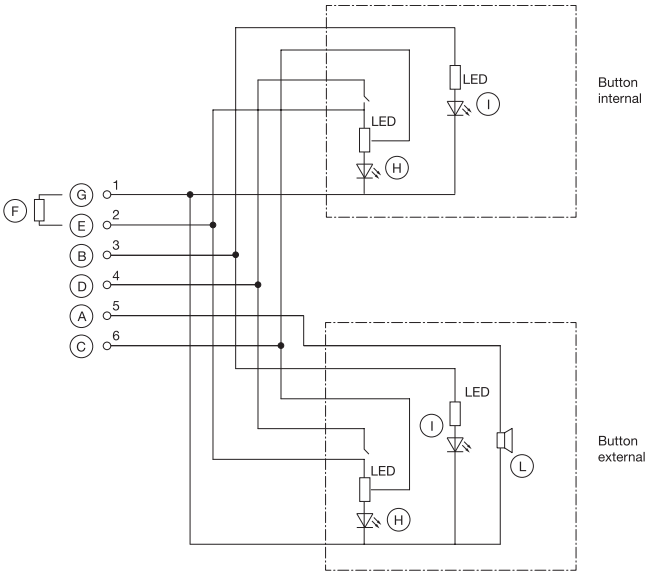

Wiring diagram 4

Legend

A = VDC finding tone
B = VDC outer ring
C = VDC inner ring
D = VDC
E = Switch (not potential-free)
F = Load (max. 250 mA)
G = 0 V
H = Inner ring
I = Outer ring
L = Finding tone

Front side

Front bezel flush, Front dimension Ø 89 mm

Colour	Front bezel	Part No.
RAL 9017 similar	Pastic black	57-300-000001
RAL 3000 similar	Plastic red	57-300-000007
RAL 1023 similar	Plastic yellow	57-300-000003
RAL 6032 similar	Plastic green	57-300-000004
RAL 5015 similar	Plastic blue	57-300-000002
RAL 7040 similar	Plastic grey	57-300-000005
RAL 5022 similar	Plastic night blue	57-300-000025
RAL 7004 similar	Aluminium natural anodized	57-300-000006
RAL 7004 similar	Aluminium natural anodized, without dismantling opening, only for outside of double-sided pushbutton for glass mounting	57-300-000014

Front bezel large, Front dimension Ø 127 mm

Colour	Front bezel	Part No.
RAL 1023 similar	Plastic yellow	57-300-000008
RAL 5015 similar	Plastic blue	57-300-000009

Front bezel safety, Front dimension Ø 99 mm

Colour	Front bezel	Part No.
RAL 3000 similar	Aluminium red anodized	57-300-000011
RAL 6032 similar	Aluminium green anodized	57-300-000024
RAL 1023 similar	Aluminium yellow anodized	57-300-000015

Warning triangle flat, Front dimension 136 x 130 x 0.8 mm

Colour	Front bezel	Part No.
RAL 1023 similar	Plastic yellow, self-adhesive, for cable exit bottom	56-8000.B

Assembly aid Ø 85/45 mm x 15/25 mm

Colour	Front bezel	Part No.
–	Aluminium, assembly aid for warning triangle flat	56-988

Cable cover

Cable cover Standard 0°

Material	Part No.
Plastic	57-9907

Cable cover Standard 45°

Material	Part No.
Plastic	57-9908

Cable cover Trichter 0°

Material	Part No.
Plastic	57-9909

Cable cover Trichter 10°

Material	Part No.
Plastic	57-9910

Cable cover Trichter 15°

Material	Part No.
Plastic	57-9911

Cable cover Trichter 25°

Material	Part No.
Plastic	57-9912

Cable cover Trichter 25° H24

Material	Part No.
Plastic	57-9913

Mounting

Dismantling tool

Product attributes	Part No.
To front bezel	**57-9901**

Mounting plate for refurbishment

Dimension	Mounting cut-out	Material	Part No.
Ø 88 mm	Ø 42.5 mm	Stainless steel	**57-9905**

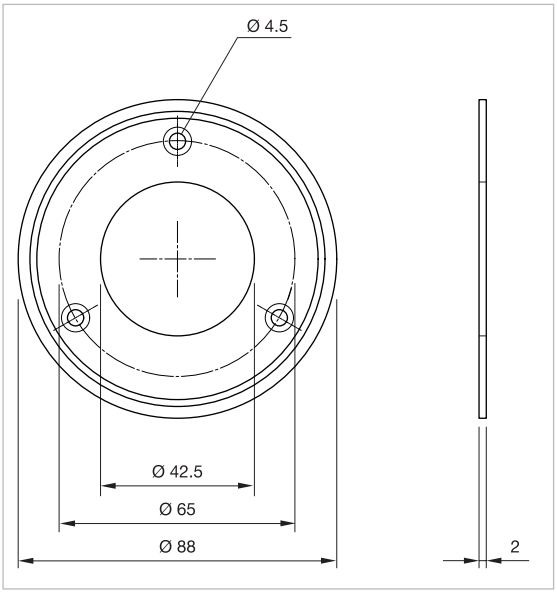

Abmessungen [mm]

Programmierkit for Multi-Legend Display

Material	Art.-Nr.
Plastic/metal	**57-9902**

57 Accessories

Mounting set for rear mounting

Product attribute	Art.-Nr.
For front panel thickness 2 mm (front bezel is not required)	**57-9920A**

Mounting set for rear mounting

Product attribute	Art.-Nr.
For front panel thickness 3 mm (front bezel is not required)	**57-9921A**

Mounting enclosure flush version

Product attribute	Dimension	Mounting cut-out	Material	Art.-Nr.
Suitable fort the most common in-wall flush boxes	100 mm x 100 mm	Ø 45 mm	Plastic black	**57-9903**

Mounting enclosure surface version

Product attribute	Dimension	Mounting cut-out	Material	Art.-Nr.
For direct wall mounting, with cable relief, break-out cable entries	100 mm x 100 mm	Ø 45 mm	Plastic black	**57-9904**

Single side pushbutton

Switching system

The Series 57 is equipped with an electronic high side switch, is short circuit proof and overload protected. In case of over current the switch opens automatically (protection against destruction). The pushbutton is not potential-free.

Material

Connection cable
Halogen-free, flame retardant, cross-linked by e-beam irradiation
Polymer according to EN 50306-2

Front bezel
Plastic
Aluminium natural anodized

Housing
Plastic

Symbol insert
Plastic
Aluminium natural anodized

Lens/Symbols
Plastic

Mechanical characteristics

Terminals
AMP MATE-N-LOK
WAGO X-COM 769
DEUTSCH connector
AMP FASTIN-FASTON
Open ends with core end-sleeves

Wire cross-section
Wire 4-/6-poles 0.24 mm^2
Wire 4-/6-poles 0.5 mm^2

Cable length
200 mm, 1000 mm, 2000 mm

Fixing screws
Countersunk screws M4 x 10 mm

Tightening torque
0.8 … 1 Nm

Key (mounting and dismantling)
Hexagon socket wrench size 2.5 mm

Mounting area
No coating errors as orange peel effect, scratches or bubbles are allowed; Flatness 0.2 mm for Ø 90 mm

Actuating force
max. 15 N

Actuating travel
~0.5 mm

Mechanical lifetime
> 8 million cycles of operation

Electrical characteristics

Illumination
Side-LED green for outer ring
Side-LED red for inner ring
Optional Tri-Colour: LED yellow for outer ring

Luminosity and wave length variations caused by LED manufacturing processes may cause slight differences regarding the illumination

Finding tone
Standard tone sequence tone 1: 500 Hz, Tone 2: 700 Hz
Volume level (± 4 dB) @ 10 cm, typical at 25 °C
(see graphic in «Application guidelines»)

Units compliant to
EN 50155
EN14752
EN 45545
EN 60947-5-1 (without Tri-Colour)

EMC
EN 61000-6-2 (without Tri-Colour)
EN 61000-6-3 (without Tri-Colour)
EN 50121-3-2
ESD min. 20 kV

Cables according to
EN 50306-2; VDE 0260-306-2
EN 50306-4; VDE 0260-306-4
EN 45545
NFF 63808 / NFF 61030
ECE R118

Symbols
TSI PRM (EBC)

Operating voltage
16 … 63 VDC (min./max.)
50 … 143 VDC (min./max.)
16.8 … 143 VDC (min./max.), Tri-Colour

Switch rating
max. 250 mA

57 Technical data

Standby current
16 … 63 VDC without tone: < 2 mA @ 24 VDC
50 … 143 VDC without tone: < 2 mA @ 110 VDC
16 … 63 VDC with tone: < 10 mA @ 24 VDC
50 … 143 VDC with tone: < 4 mA @ 110 VDC
16 … 63 VDC with tone and illumination: < 20 mA @ 24 VDC

Standby current Tri-Colour
16,8 … 143 VDC without illumination: < 15 mA @ 24 VDC
16,8 … 143 VDC without illumination: < 5 mA @ 110 VDC
16,8 … 143 VDC with illumination: < 35 mA @ 24 VDC
16,8 … 143 VDC with illumination: < 10 mA @ 110 VDC

Note: Only pin 1 (0 V) und pin 4 (VDC) connected

Electric strength
4000 VAC, 50 Hz, 1 minute,
all terminals against mounting plate / front element

Environmental conditions

Storage temperature
–45 °C … +90 °C

Operating temperature
–40 °C … +85 °C

Protection degree
Front side IP69K
Rear side IP67

Impact resistance
IK07

Climate resistance
Damp heat, cyclic
48 hours, +25 °C / 97 %, +55 °C / 93 % relative humidity,
as per EN IEC 60068-2-30
Damp heat, state
56 days, +40 °C / 93 % relative humidity, as per
EN IEC 60068-2-78
Salt spray 96 h (DIN EN 60068-2-11)

Rapid change of temperature
5 cycles, –45 °C … +90 °C, as per EN IEC 60068-2-14

Shock resistance
50 g, pulse width 11 ms, 6 shocks/axis as per
DIN EN 60068-2-27

Vibration resistance
Broad band noise as per EN 61373 class 1B
10 g from 10 Hz … 500 Hz, as per DIN EN 60068-2-6

Approvals

Approbations
CCC (not Tri-Colour)
E1 Regulation No. 10 (not Tri-Colour)
E1 118RII (not Tri-Colour)
TSI PRM (EBC)

Declaration of conformity
CE
2014 / 30 / EU (EMC)
1300 / 2014 / EU (TSI PRM)
2011 / 65 / EU (RoHS)

Indicator

Material

Connection cable
Halogen-free, flame retardant, cross-linked by e-beam irradiation
Polymer according to EN 50306-2

Lens
Plastic

Front bezel
Plastic
Aluminium natural anodized

Housing
Plastic

Mechanical characteristics

Terminals
AMP MATE-N-LOK
WAGO X-COM 769
DEUTSCH connector
AMP FASTIN-FASTON
Open ends with core end-sleeves

Wire cross-section
Cable 2-poles 0.5 mm²
Cable 4-poles 0.5 mm²

Cable length
200 mm, 1000 mm, 2000 mm

Fixing screws
Countersunk screws M4 x 10 mm

Tightening torque
max. 1 Nm

Key (mounting and dismantling)
Hexagon socket wrench size 2.5 mm

Mounting area
No coating errors as orange peel effect, scratches or bubbles are allowed; Flatness 0.2 mm for Ø 90 mm

Electrical characteristics

Illumination
Single colour: LED red, yellow, green, blue, white
Bi-colour: LED red/yellow, red/green, blue/white

Supply voltage	24 VDC ±30 %
	110 VDC ±30 %
Current consumption	< 60mA

Luminosity and wave length variations caused by LED manufacturing processes may cause slight differences regarding the illumination.

Units compliant to
EN 50155
EN 45545

EMC
EN 61000-6-2
EN 61000-6-3
EN 50121-3-2

Cables according to
EN 50306-2; VDE 0260-306-2
EN 50306-4; VDE 0260-306-4
EN 45545
NFF 63808/NFF 61030
ECE R118

Environmental conditions

Storage temperature
–45 °C … +90 °C

Operating temperature
–40 °C … +85 °C

Protection degree
Front side IP69K
Rear side IP67

Impact resistance
IK07

Climate resistance
Damp heat, state
56 days, + 40 °C/93 % relative humidity,
as per EN IEC 60068-2-78

Rapid change of temperature
5 cycles, – 45 °C … +90 °C, as per EN IEC 60068-2-14

Shock resistance
(semi-sinusoidal)
max. 500 m/s², pulse width 11 ms, as per EN IEC 60068-2-27

Vibration resistance
(sinusoidal)
max. 100 m/s² at 10 Hz … 500 Hz, as per EN IEC 60068-2-6

Approvals

Approbations
CCC
E1 118RII

Declaration of conformity
CE
2014/30/EU (EMC)
1300/2014/EU (TSI PRM)
2011/65/EU (RoHS)

57 Technical data

Warning indicator

Material

Connection cable
Halogen-free, flame retardant, cross-linked by e-beam irradiation
Polymer according to EN 50306-2

Lens
Plastic

Front bezel
Plastic
Aluminium natural anodized

Housing
Plastic

Mechanical characteristics

Terminals
AMP MATE-N-LOK
WAGO X-COM 769
DEUTSCH connector
AMP FASTIN-FASTON
Open ends with core end-sleeves

Wire cross-section
Cable 2-poles 0.5 mm²

Cable length
200 mm; 1000 mm; 2000 mm

Fixing screws
Countersunk screws M4 x 10 mm

Tightening torque
max. 1 Nm

Key (mounting and dismantling)
Hexagon socket wrench size 2.5 mm

Mounting area
No coating errors as orange peel effect, scratches or bubbles are allowed; Flatness 0.2 mm for Ø 90 mm

Electrical characteristics

Illumination
LED red, yellow

Supply voltage	24 VDC ± 30 v%
	110 VDC ±30 %
Current consumption	< 50mA

Luminosity and wave length variations caused by LED manufacturing processes may cause slight differences regarding the illumination.

Units compliant to
EN 50155

EMC
EN 61000-6-2
EN 61000-6-3
EN 50121-3-2

Cables according to
DIN EN 50306-2; VDE 0260-306-2
DIN EN 50306-4; VDE 0260-306-4
EN 45545
NFF 63808 / NFF 61030
ECE R118

Environmental conditions

Storage temperature
–45 °C … +90 °C

Operating temperature
–40 °C … +85 °C

Protection degree
Front side IP69K
Rear side IP67

Impact resistance
IK07

Climate resistance
Damp heat, state
56 days, +40 °C / 93 % relative humidity,
as per EN IEC 60068-2-78

Rapid change of temperature
5 cycles, –45 °C … +90 °C, as per EN IEC 60068-2-14

Shock resistance
(semi-sinusoidal)
max. 500 m / s², pulse width 11 ms, as per EN IEC 60068-2-27

Vibration resistance
(sinusoidal)
max. 100 m / s² at 10 Hz … 500 Hz, as per EN IEC 60068-2-6

Approvals

Approbations
CCC
E1 118RII

Declaration of conformity
CE
2014 / 30 / EU (EMC)
1300 / 2014 / EU (TSI PRM)
2011 / 65 / EU (RoHS)

Multi-Tone Warning Indicator

Material

Connection cable
Halogen-free, flame retardant, cross-linked by e-beam irradiation
Polymer according to EN 50306-2

Front cap
Plastic black

Lens
Plastic transparent

Front bezel
Plastic according to UL94 V0
Aluminium natural anodized

Housing
Plastic according to UL94 V0

Mechanical characteristics

Terminals
AMP MATE-N-LOK
WAGO X-COM 769-106
DEUTSCH DT04-6P-C015
M8x1, 6-poles
Open ends with core end-sleeves

Wire cross-section
Wire 6-poles 0.24 mm^2
Wire 6-poles 0.5 mm^2

Cable length
200 mm, 1000 mm, 2000 mm

Fixing screws
For front mounting countersunk screws M4 x 10 mm

Tightening torque
0.8 … 1 Nm

Key (mounting and dismantling)
Hexagon socket wrench size 2.5 mm

Electrical characteristics

Illumination

Single colour:	18 LEDs red, yellow, blue, white
Bi-colour:	9/9 LEDs red / yellow, red / green

Operating voltage	24 VDC (–30 % ... +25 %)
Current consumption	depending on voltage and volume
	< 100 mA for the 3-tone sequences module
	< 75 mA for passive loudspeakers

Luminosity and wave length variations caused by LED manufacturing processes may cause slight differences regarding the illumination.

Electric strength
4000 VAC, 50 Hz, 1 min, between all terminals and mounting plate / front element

Units compliant to
EN 50155:2017
EN 14752

EMC
IEC 61000-6-2:2016, EN 61000-6-2:2019
EN 61000-6-3:2006+A1:2010
EN 50121-3-2
ESD according to EN 61000-4-2 ± 20 kV
Regulation no. EMV 06 (radio compatibility of Deutsche Bahn)

Cable
DIN EN 50306-2; VDE 0260-306-2
DIN EN 50306-4; VDE 0260-306-2
EN 45545
ECE R118

Acoustic characteristics

3-Tone sequences
The volume of each tone sequence can be changed in 17 steps of 1.5 dB each, by means of the tone-editing programme or “external” by wire. Tone sequence 1 and 2 are being activated by wire, whereby sequence 3 is being activated binarily. The tones can be played in any sequence at different volumes, durations and intervals. Programmable according to TSI PRM.

Passive loudspeaker
In contrast to the version with tone sequences, the loudspeaker requires an external signal source with amplification.
Impedance: 8 Ohm ± 15 %, rated power 1.0 W, max. power 1.5 W

Frequency range
500 Hz ... 3000 Hz ± 1 % (3-tone sequences module)
30 Hz ... 20000 Hz (passive loudspeaker)

Length of time
100 ms ... ∞ (endless)

Sound pressure level
3-tone sequences module:
90 dB (A) 10 cm @ 1 kHz
Level 17 for 3-tone sequences Module
programmable according to TSI PRM.

Passive speaker:
98 ± 3 dBA @ 1 W RMS @10 cm

57 Technical data

Environmental conditions

Storage temperature
–45 °C … +85 °C

Operating temperature
–40 °C … +70 °C

Protection degree
IP67 front side
IP67 rear side

Impact resistance
IK05

Climate resistance
Damp heat, cyclic
48 hours, +25 °C / 97 %, +55 °C / 93 % relative humidity, as per EN IEC 60068-2-30

Damp heat, state
56 days, +40 °C / 93 % relative humidity, as per EN IEC 60068-2-78

Rapid change of temperature
5 cycles, –45 °C … +90 °C, as per EN IEC 60068-2-14

Shock resistance
(semi-sinusoidal)
500 m/s², pulse width 11 ms, 6 shocks/axis as per DIN EN 60068-2-27

Vibration resistance
(semi-sinusoidal)
max. 100 m/s² from 10 Hz … 500 Hz, according to EN IEC 60068-2-6

Broad band noise as per EN 61373 class 1B
5.72 m/s² 5 h per axis, according to EN IEC 60068-2-6

Approvals

Conformities
CE
2014/30/EU (EMC)
1300/2014/EU (TSI PRM)
2011/65/EU (RoHS)

Multi-Legend Display

Material

Front bezel
Plastic according to UL94 V0

Display cover
Plastic transparent according to UL94 V0

Housing
Plastic according to UL94 V0

Plug connection
Plastic according UL94 V0

Mechanical characteristics

Terminals
Plug connection on Multi-Legend Display
WAGO 713-1428/037-000

Mating connector (part of delivery)
(WAGO 713-1108/037-9037)
Uniquely compact, 2-row plug-in system for conductor cross-sections up to 1.5 mm² and CAGE CLAMP® connection technology
Solid conductor 0.08 … 1.5 mm² / 28 … 16 AWG
Fine-stranded conductor 0.08 … 1.5 mm² / 28 … 16 AWG
Fine-stranded conductor; with ferrule with plastic collar
0.25 … 1 mm²

Mounting screws
For front mounting pan-head screws M4 x 12 mm

Tightening torque
0.8 … 1 Nm

Mounting tool
Hexagon socket, spanner size 2.5 mm

Electrical characteristics

Geräte entsprechen
EN 50155
EN 45545

EMV
EN 61000-6-2
EN 61000-6-3
EN 50121-3-2
ESD according to EN 61000-4-2 +/-20 kV
Regulation No. EMV 06 (Radio compatibility of Deutsche Bahn)

Cable recommendation
According to EN 45545 for railway applications
According to ECE R118 for road vehicles

Operating voltage
24 VDC –30 % … +25 %

Electric strength
4000 VAC, 50 Hz, 1 min, between all connections and mounting plate / front panel

Current consumption
Max. 140 mA

Control
4 binary inputs (24 VDC) for selection of the max. 18 images / symbols

Interface
RS232 RX and TX

Brightness sensor
Ambient light sensor
(from 10 ... 1000 lux)

Display size
3” TFT display
LED backlight

Picture size
432 × 432 px

File format
PNG, JPG, JPEG, BMP

Colours
RGB 24 bit

Number of images / symbols
Max. 18

Brightness
Max. 800 cd / m²

Electrical life
Display life ~50 000 h Ø 50 % brightness
Depending on the brightness of the display, the service life is affected

LED backlighting
Technology-related fluctuations in brightness and wavelength of LEDs of the LEDs can lead to visible differences in illumination.

Contrast ratio
600 : 1

Viewing angle
140°

Ambient conditions

Operating temperature
–20 °C ... +70 °C

Storage temperature
–30 °C ... +80 °C

Protection degree
IP67 / IP65 front side towards internal electronics and panel
IP20 rear side

Climate resistance
Damp heat, cyclic
48 hours, +25 °C / 97 %, +55 °C / 93 % relative humidity, according to EN IEC 60068-2-30

Humid heat, constant
56 days, + 40 °C / 93 % relative humidity, according to EN IEC 60068-2-78

Rapid temperature change
5 cycles, –30 °C ... +80 °C, according to EN IEC 60068-2-14

Shock resistance
(semi-sinusoidal)
500 m / s², pulse width 11 ms, 6 shocks / axis, according to DIN EN 60068-2-27

Vibration resistance
(sinusoidal)
max. 100 m / s² from 10 Hz ... 500 Hz, according to EN IEC 60068-2-6

Broadband noise
Broadband noise according to EN 61373 class 1B
5.72 m / s² 5 h per axis, according to EN IEC 60068-2-6

Certificates

Conformities
CE
2014 / 30 / EU (EMC)
2011 / 65 / EU (RoHS)

57 Technical data

Call for aid pushbutton

Switching system

The Series 57 is equipped with an electronic high side switch, is short circuit proof and overload protected. In case of over current the switch opens automatically (protection against destruction). The pushbutton is not potential-free.

Material

Connection cable
Halogen-free, flame retardant, cross-linked by e-beam irradiation
Polymer according to EN 50306-2

Front bezel
Aluminium anodized
Plastic

Housing
Plastic

Symbol insert
Plastic
Aluminium anodized

Lens / Symbols
Plastic

Mechanical characteristics

Terminals
AMP MATE-N-LOK
WAGO X-COM 769
DEUTSCH connector
AMP FASTIN-FASTON
Open ends with core end-sleeves

Wire cross-section
Wire 4-/6-poles 0.24 mm^2
Wire 4-/6-poles 0.5 mm^2

Cable length
200 mm, 1000 mm, 2000 mm

Fixing screws
Countersunk screws M4 x 10 mm

Tightening torque
max. 1 Nm

Key (mounting and dismantling)
Hexagon socket wrench size 2.5 mm

Mounting area
No coating errors as orange peel effect, scratches or bubbles are allowed; Flatness 0.2 mm for Ø 90 mm

Actuating force
max. 15 N

Actuating travel
~0.5 mm

Mechanical lifetime
> 8 million cycles of operation

Electrical characteristics

Illumination
Side-LED yellow or green for outer ring
Side-LED yellow or red for inner ring

Luminosity and wave length variations caused by LED manufacturing processes may cause slight differences regarding the illumination

Finding tone
Standard tone sequence tone 1: 500 Hz, Tone 2: 700 Hz
Volume level (± 4 dB) @ 10 cm, typical at 25 °C
(see graphic in «Application guidelines»)

Units compliant to
EN 50155
EN 16584-1
EN 16584-2
EN 16683

EMV
EN 61000-6-2
EN 61000-6-3
EN 50121-3-2
ESD mind. 20 kV
EN 45545

Cables according to
EN 50306-2; VDE 0260-306-2
EN 50306-4; VDE 0260-306-4
EN 45545
NFF 63808 / NFF 61030
ECE R118

Symbole
TSI PRM (EBC)

Operating voltage
16 … 63 VDC (min./max.)

Switch rating
max. 250 mA

Standby current
16 … 63 VDC: < 2 mA @ 24 VDC

Note: Only pin 1 (0 V) und pin 4 (VDC) connected

Electric strength
4000 VAC, 50 Hz, 1 min, between all terminals and mounting plate / front element

Environmental conditions

Storage temperature
-45 °C … +90 °C

Operating temperature
-40 °C … +85 °C

Protection degree
Front side IP69K
Rear side IP67

Impact resistance
IK07

Climate resistance
Damp heat, cyclic
48 hours, +25 °C / 97 %, +55 °C / 93 % relative humidity, as per EN IEC 60068-2-30

Damp heat, state
56 days, +40 °C / 93 % relative humidity, as per EN IEC 60068-2-78
Salt spray 96 h (DIN EN 60068-2-11)

Rapid change of temperature
5 cycles, –45 °C … +90 °C, as per EN IEC 60068-2-14

Shock resistance
50 g, pulse width 11 ms, 6 shocks/axis as per DIN EN 60068-2-27

Vibration resistance
Broad band noise as per EN 61373 class 1B
10 g from 10 Hz ... 500 Hz, as per DIN EN 60068-2-6

Approvals

Approbations
CCC
E1 Regulation No. 10
E1 118RII
TSI PRM (EBC)

Declaration of conformity
CE
2014 / 30 / EU (EMC)
1300 / 2014 / EU (TSI PRM)
2011 / 65 / EU (RoHS)

Pushbutton Glass mounting

Switching system

The Series 57 is equipped with an electronic high side switch, is short circuit proof and overload protected. In case of over current the switch opens automatically (protection against destruction). The pushbutton is not potential-free.

Material

Connection cable
Halogen-free, flame retardant, cross-linked by e-beam irradiation Polymer according to EN 50306-2

Front bezel
Plastic
Aluminium natural anodized

Housing
Plastic

Flange
Plastic

Symbol insert
Plastic
Aluminium natural anodized

Lens / Symbols
Plastic

Mechanical characteristics

Terminals
AMP MATE-N-LOK
WAGO X-COM 769
DEUTSCH connector
AMP FASTIN-FASTON
Open ends with core end-sleeves

57 Technical data

Wire cross-section
Wire 4-/6-poles 0.24 mm^2
Wire 4-/6-poles 0.5 mm^2
Wire 6 x 0.5 mm^2 (single side pushbutton)

Cable length
200 mm, 1000 mm, 2000 mm

Fixing screws
Single side pushbutton: PT head screw Torx K30x20
Double side pushbutton: PT head screw Torx K30x10
The screws are included in delivery.

Tightening torque
Single side pushbutton: max. 0.7 Nm
Double side pushbutton: max. 0.5 Nm

Key (mounting and dismantling)
Single side pushbutton: Torx plus 8 IP
Double side pushbutton: Torx plus 10 IP

Actuating force
max. 15 N

Actuating travel
~0.5 mm

Mechanical lifetime
> 8 million cycles of operation

Electrical characteristics

Illumination
Side-LED green for outer ring
Side-LED red for inner ring

Luminosity and wave length variations caused by LED manufacturing processes may cause slight differences regarding the illumination

Finding tone
Standard tone sequence tone 1: 500 Hz, Tone 2: 700 Hz
Volume level (± 4 dB) @ 10 cm, typical at 25 °C
(see graphic in «Application guidelines»)

Units compliant to
EN 50155
EN14752
EN 45545

EMC
EN 61000-6-2
EN 61000-6-3
EN 50121-3-2
ESD min. 20 kV

Cables according to
EN 50306-2; VDE 0260-306-2
EN 50306-4; VDE 0260-306-4
EN 45545
NFF 63808 / NFF 61030
ECE R118

Symbols
TSI PRM (EBC)

Operating voltage
16 … 63 VDC (min./max.)
50 … 143 VDC (min./max.)

Switch rating
max. 250 mA

Standby current
Single side pushbutton
16 … 63 VDC without tone: < 2 mA @ 24 VDC
50 … 143 VDC without tone: < 2 mA @ 110 VDC
16 … 63 VDC with tone: < 10 mA @ 24 VDC
50 … 143 VDC with tone: < 4 mA @ 110 VDC
16 … 63 VDC with tone and illumination: < 20 mA @ 24 VDC

Double side pushbutton
16 … 63 VDC without tone: < 4 mA @ 24 VDC
50 … 143 VDC without tone: < 4 mA @ 110 VDC
16 … 63 VDC with tone: < 20 mA @ 24 VDC
50 … 143 VDC with tone: < 8 mA @ 110 VDC

Note: Only pin 1 (0 V) und pin 4 (VDC) connected

Electric strength
4000 VAC, 50 Hz, 1 min, between all terminals and mounting plate/ front element

Environmental conditions

Storage temperature
–45 °C … +90 °C

Operating temperature
–40 °C … +85 °C

Protection degree
Front side IP69K
Rear side IP67
Cable grommet to door frame IP40

Impact resistance
IK07

Climate resistance

Damp heat, cyclic
48 hours, +25 °C / 97 %, +55 °C / 93 % relative humidity, as per EN IEC 60068-2-30

Damp heat, state
56 days, +40 °C / 93 % relative humidity, as per EN IEC 60068-2-78
Salt spray 96 h (DIN EN 60068-2-11)

Rapid change of temperature
5 cycles, – 45 °C … +90 °C, as per EN IEC 60068-2-14

Shock resistance

50 g, pulse width 11 ms, 6 shocks /axis as per DIN EN 60068-2-27

Vibration resistance

Broad band noise as per EN 61373 class 1B
10 g from 10 Hz ... 500 Hz, as per DIN EN 60068-2-6

EAO reserves the right to alter specifications without further notice.

Approvals

Approbations

CCC
E1 Regulation No. 10
E1 118RII
TSI PRM (EBC)

Declaration of conformity

CE
2014 / 30 / EU (EMC)
1300 / 2014 / EU (TSI PRM)
2011 / 65 / EU (RoHS)

57 Application guidelines

Finding tone pushbutton

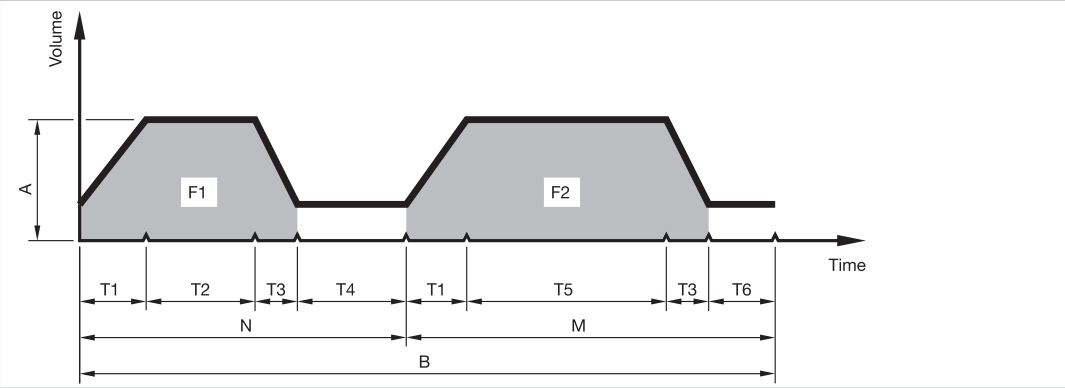

Diagram

F1	Frequency 1 of a tone sequence
T2	Playing time tone 1
T4	Break
N	Number of repetitions of tone 1
F2	Frequency 2 of a tone sequence
T5	Playing time tone 2
T6	Break
M	Number of repetitions of tone 2
A	Volume level (±4 dB) @ 10 cm, typical at 25 °C
B	Number of repetitions of the complete tone sequence, or blockage of the tone sequence
T1	Fade-in tone 1 and 2
T3	Fade-out tone 1 and 2

Tone sequence		
	Parameter	Standard Finding tone
Tone 1	F1	500 Hz
	T2	100 ms
	T4	200 ms
	N	1
Tone 2	F2	700 Hz
	T5	100 ms
	T6	900 ms
	M	1
General	A	65 dB (A)
	B	∞
	T1	100 ms
	T3	100 ms

Multi-Tone Warning Indicator, 3-Tone sequence module

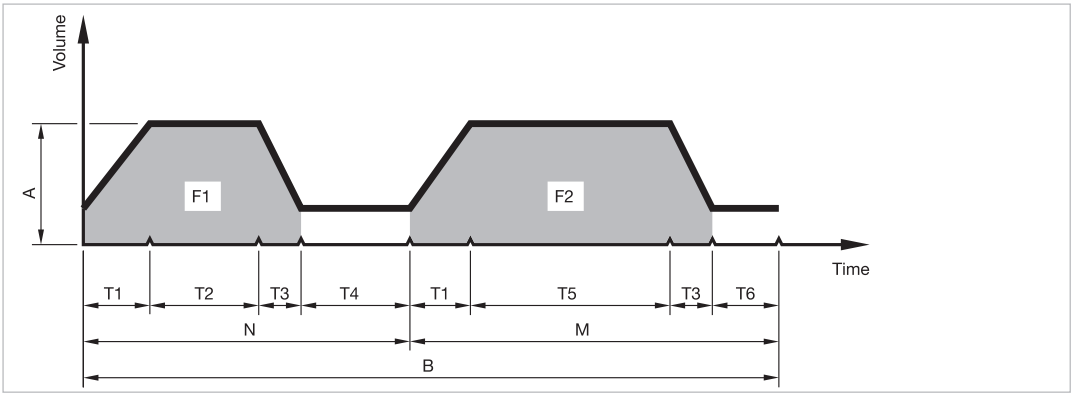

Diagram

F1	Frequency 1 of a tone sequence
T2	Playing time tone 1
T4	Break
N	Number of repetitions of tone 1
F2	Frequency 2 of a tone sequence
T5	Playing time tone 2
T6	Break
M	Number of repetitions of tone 2
A	Volume level (±4 dB) @ 10 cm, typical at 25 °C
B	Number of repetitions of the complete tone sequence, or blockage of the tone sequence
T1	Fade-in tone 1 and 2
T3	Fade-out tone 1 and 2

Tone sequences 1-5 Transportation (T)						
	Parameter	Sequence 1 Door orientation signal	Sequence 2 Door opening signal	Sequence 3 Warning signal for door closing	Sequence 4 Door out of order signal	Sequence 5 Hussle Alarm
Tone 1	F1	500 Hz	800 Hz	2000 Hz	1400 Hz	875 Hz
	T2	500 ms	300 ms	500 ms	50 ms	1000 ms
	T4	900 ms	700 ms	200 ms	100 ms	250 ms
	N	∞	1	∞	3	3
Tone 2	F2	deactivated	830 Hz	deactivated	deactivated	deactivated
	T5	deactivated	500 ms	deactivated	deactivated	deactivated
	T6	deactivated	0 ms	deactivated	deactivated	deactivated
	M	deactivated	1	deactivated	deactivated	deactivated
General	A	3 / 78 dB (A)	3 / 78 dB (A)	5 / 90 dB (A)	3 / 78 dB (A)	3 / 78 dB (A)
	B	∞	∞	1	1	1
	T1	0 ms	0 ms	0 ms	0 ms	0 ms
	T3	0 ms	0 ms	0 ms	0 ms	0 ms

57 Application guidelines

Tone sequences 1-3 Transportation (T1)				
	Parameter	Sequence 1 Door enabled	Sequence 2 Door closing	Sequence 3 Signal for visual impaired people
Tone 1	F1	1500 Hz	1900 Hz	600 Hz
	T2	∞	50 ms	50 ms
	T4	250 ms	50 ms	20 ms
	N	∞	∞	2
Tone 2	F2	deactivated	deactivated	500 Hz
	T5	deactivated	deactivated	1000 ms
	T6	deactivated	deactivated	900 ms
	M	deactivated	deactivated	1
General	A	17 / 90 db (A)	17 / 90 dB (A)	9 / 78 dB (A)
	B	∞	∞	∞
	T1	0 ms	0 ms	0 ms
	T3	0 ms	0 ms	0 ms

Tone sequences 6-10 Machinery (M)						
	Parameter	Sequence 6	Sequence 7	Sequence 8	Sequence 9	Sequence 10
Tone 1	F1	750 Hz	2500 Hz	2000 Hz	2500 Hz	1000 Hz
	T2	100 ms	300 ms	250 ms	100 ms	500 ms
	T4	200 ms	500 ms	200 ms	100 ms	100 ms
	N	1	1	1	2	1
Tone 2	F2	500 Hz	2000 Hz	1000 Hz	2000 Hz	1500 Hz
	T5	450 ms	500 ms	250 ms	100 ms	500 ms
	T6	100 ms	400 ms	200 ms	100 ms	100 ms
	M	1	1	1	2	1
General	A	4 / 84 dB (A)	4 / 84 dB (A)	5 / 90 dB (A)	5 / 90 dB (A)	4 / 84 dB (A)
	B	∞	∞	∞	∞	∞
	T1	0 ms	0 ms	0 ms	0 ms	0 ms
	T3	200 ms	0 ms	500 ms	0 ms	0 ms