DC Single-Acting Solenoid in Explosion-Proof Design ATEX + IECEx

1
Product group

G TC E

Function

- Increasing force vs. stroke characteristic
- Size 050, 100 in pull type and push type
  Size 140 in push type

Fig. 1: Type G TC E 100 A GD A01

Construction

- Armature guided in maintenance free bearings.
  High service life
- Insulation materials of the excitation winding correspond to thermal class F
- Electrical connection via terminal box
- Protection class according to DIN VDE/DIN EN 60529, when properly installed
  - Electrical part: IP 65
  - Functional part: IP 54
- Explosion protection:
  - Size 050: Ex II 2G Ex eb mb IIC T4 Gb
    Ex II 2D Ex tb IIIC T130°C Db
  - Size 100/140: Ex II 2G Ex eb mb IIC T5/T4 Gb
    Ex II 2D Ex tb IIIC T95°C/T130°C Db
- Flange mounting via three threaded bore holes or with additional flange

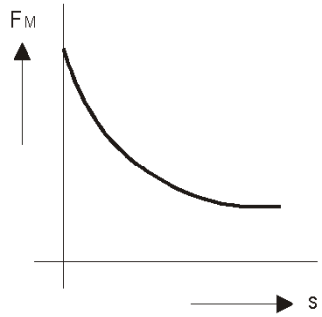

Fig. 2: Magnetic force vs. stroke characteristic

Application examples

- Application in explosive areas
  (gas, dust, zones: 1.21, EPL: Gb, Db)
  e.g. in chemical companies, refineries and tank plants

Options and accessories

- Version in higher protection class and for humid atmospheres
- Modifications and special designs
- Please contact us for application related solutions

Standards and approvals

- Design and testing according to DIN VDE 0580
- Production according to ISO 9001, DIN EN ISO/IEC 80079-34
- ATEX, IECEx

Technical Data of series

		G TC E ... A GD ... DC Types			G TC E ... A GD ... AC Types (with integrated rectifier)
Construction size		**050**	**100**	**140**	**100**
Design number		A01/A02	A01	A01	A10
Operating Mode		S1	S1	S1	S1
Stroke s	(mm)	**Magnetic force F_M (N)**			
	0	90	317	549	317
	2	23	143	342	143
	3	21	130	333	132
	4	19	126	328	126
	5	18	124	324	124
	6	17	122	319	122
	8	14	121	315	121
	10	12	116	306	116
	12		113	299	113
	15		106	288	106
	20		96	266	96
	25		84	227	84
	30		67	189	67
	35			153	
	40			122	
Rated voltage		⎓ 24 V	⎓ 24 V	⎓ 24 V	230 V / 50-60 Hz
		an adaptation of the exciter coil to a rated voltage of max. ⎓ 230 V is possible on request			
Rated work A_N	(Ncm)	12	201	488	201
Rated power P_{20}	(W)	14	52	87	51
Max. reference temperature	(°C)	40	40	40	40
Max. switching frequency S_h	(1/h)	15.000	5.700	3.400	5.700
Actuation time t_1	(ms)	128	400	625	400
Fall time t_2	(ms)	101	230	410	230
Inductance $L = \pi \times R$ ($\pi \times 10^{-3}$) — Time constant π Armature in stroke start position	(ms)	15	52	64	52
Inductance $L = \pi \times R$ ($\pi \times 10^{-3}$) — Armature in stroke end position	(ms)	18	45	85	45
Armature weight m_A	(kg)	0.14	1.25	1.85	1.25
Solenoid weight m_M	(kg)	1.14	7.04	17.33	7.04
Circuit diagram		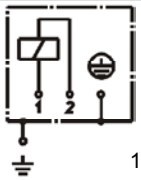 1)	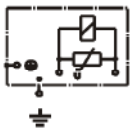	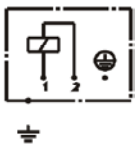 1)	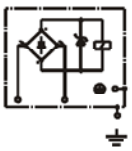
RoHS conforming		yes	yes	no	no

The times listed in above table refer to rated voltage, max. stroke, weight load of 70 % of rated magnetic force. These values may decrease considerably with higher load.

The magnetic force values stated in the table refer to 90% of the rated voltage and normal operating temperature. There may be deviations with other rated voltages. Due to natural dispersion, the magnetic force values may deviate by approx. 10% from the values indicated in the tables.

The normal operating temperature is based on:

a) Mounting on heat conducting base
b) Rated voltage ⎓ 24 V or 230 V/50 - 60 Hz (other voltages on request)
c) Operating mode S1 (100 % ED)
d) Reference temperature 40°C

1) The user has to ensure by the activation that with a rated voltage
- up to 30 V the disconnect-overvoltage of 480 V
- up to 60 V the disconnect-overvoltage of 800 V
- up to 110 V the disconnect-overvoltage of 1200 V
- up to 250 V the disconnect-overvoltage of 1600 V

will not be exceeded.

Dimension of series G TC E

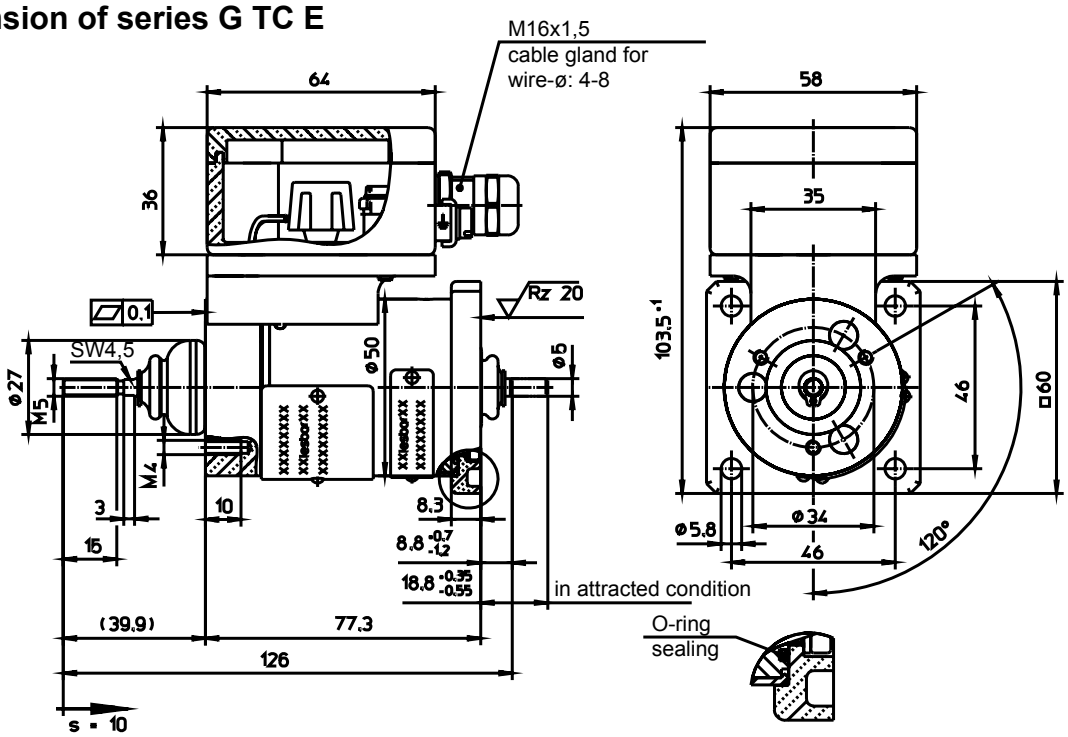

Fig. 3: Type G TC E 050 A GD A01

Torque of flange-fastening screws (M4): 2,3 Nm

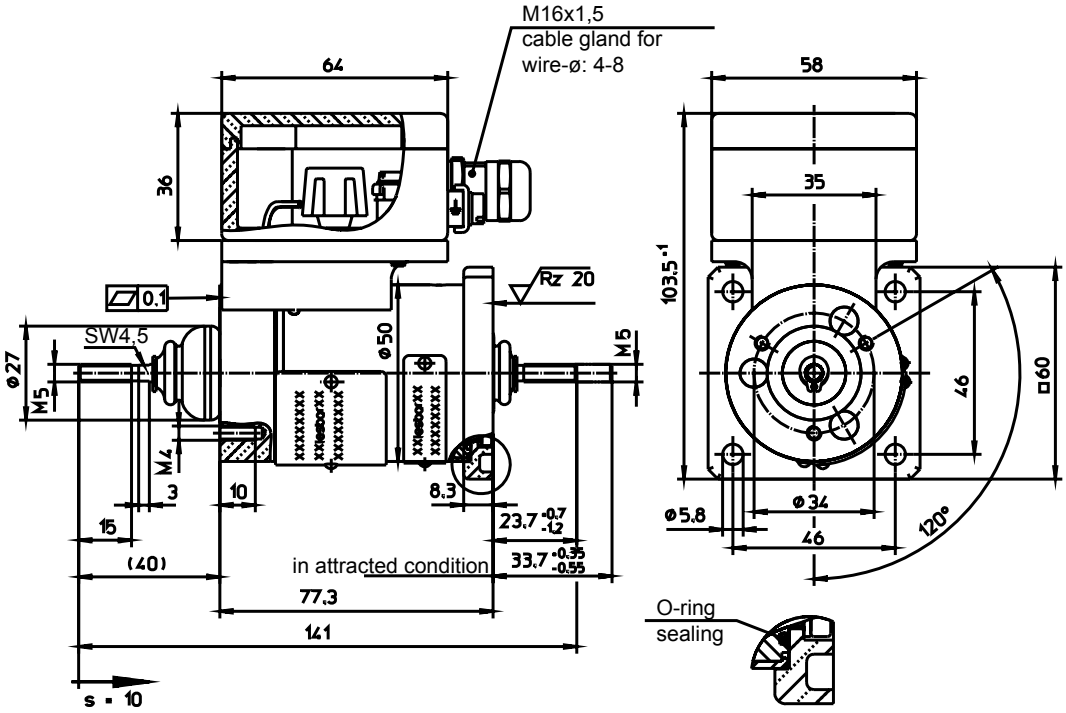

Fig. 4: Type G TC E 050 A GD A02

Torque of flange-fastening screws (M4): 2,3 Nm

Information and remarks concerning European directives can be taken from the correspondent information sheet which is available under *Produktinfo.Magnet-Schultz.com*.

Please make sure that the described devices are suitable for your application. Please also note the accompanying operating manual which will be delivered with each device. One copy of the CE declaration of conformity is attached to the shipment. Supplementary information concerning its duly assembly can be found also in -Technical Explanations, in the effective DIN VDE0580 as well as in the relevant specifications.

This part list is a document for technically qualified personnel.

The present publication is for informational purposes only and shall not be construed as mandatory illustration of the products unless otherwise confirmed expressively.

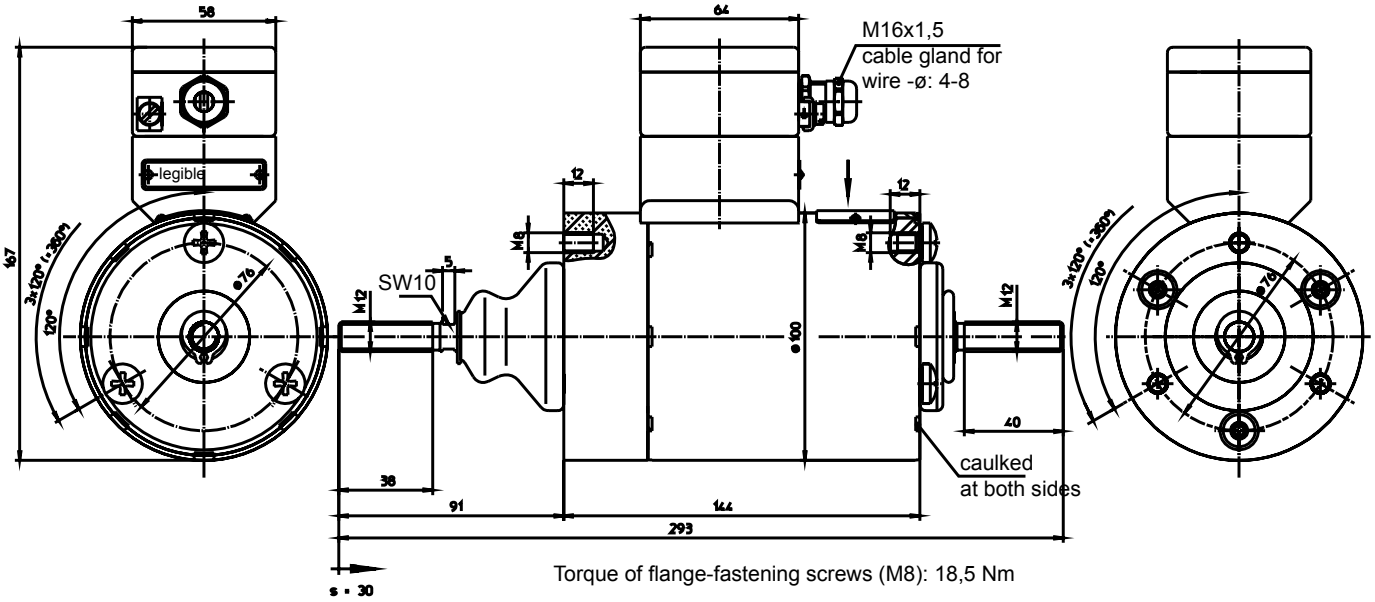

Fig. 5: Type G TC E 100 A GD A01 (DC) to
Type G TC E 100 A GD A10 (AC)

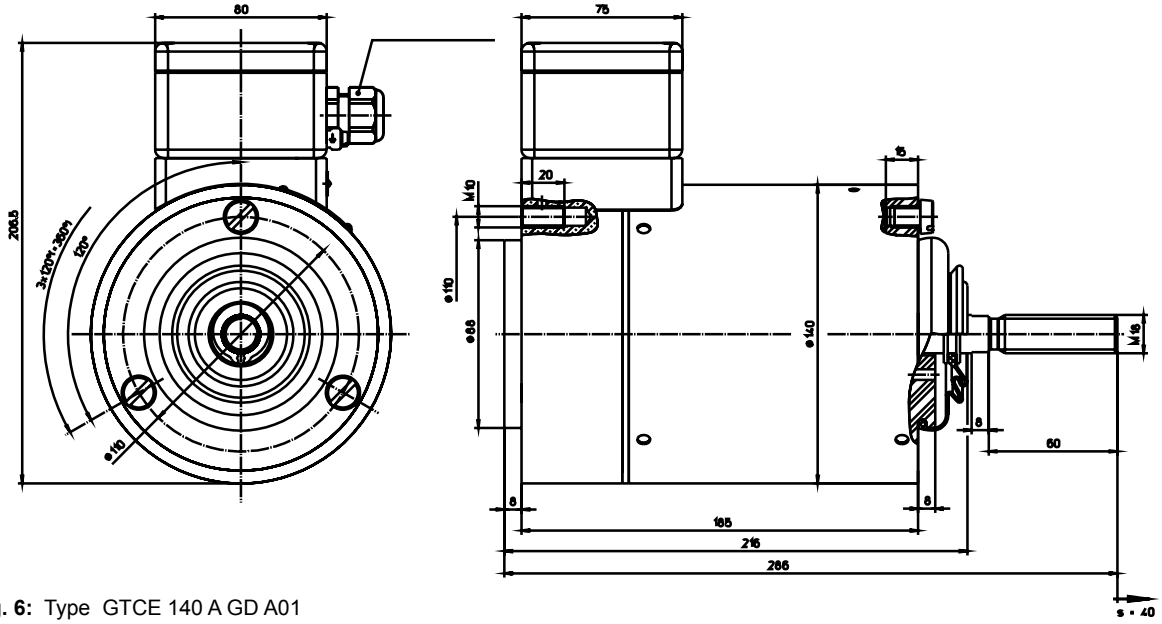

Fig. 6: Type GTCE 140 A GD A01

Type code

Designation	Size	Working mode	Type of current
G TC E 050 AGD A01	50 mm	Pull-type	DC
G TC E 050 AGD A02		Pull-type and push-type	DC
G TC E 100 AGD A01	100 mm		DC
G TC E 100 AGD A10			AC
G TC E 140 AGD A01	140 mm	Push-type	DC

Example

Type	G TC E 100 A GD A01
Voltage	⎓ 24 V DC
Operating mode	S1 (100 %)

Specials designs

Please do not hesitate to ask us for application-oriented problem solutions. In order to find rapidly a reliable solution we need complete details about your application conditions. The details should be specified as precisely as possible in accordance with the relevant -Technical Explanations.

If necessary, please request the support of our corresponding technical office.