# TGRF-4904

## Tinytag Plus Radio Four Input Count Data Logger (0 to 32,000 counts per interval) x 4

Tinytag Plus Radio data loggers are a range of wireless data logging products designed for outdoor and industrial use. The loggers are used as part of a Tinytag Radio system that forms a robust data network that allows a user to see the conditions within an application from their own desk, across a LAN or the Internet.

Housed in a robust, waterproof case, the TGRF-4901 is a count data logger that is ideal for recording the outputs of a variety of different volt-free and digital sensors.

### Features

- Four input count monitoring
- Robust data network
- Easy to install
- Alarm e-mails
- 200m typical range (line of sight)
- High accuracy and reading resolution
- 12 month battery life
- Low battery monitor
- User-replaceable battery
- Waterproof case

### Popular Applications

- Industrial
  - Flow rate (liquids and gas)
  - Conveyor belt monitoring
- Outdoor
  - People counting

# TGRF-4904

## Tinytag Plus Radio Four Input Count Data Logger (0 to 32,000 counts per interval) x 4

### How the Logger Works

The TGRF-4901 is a battery powered, four input count radio data logger that can record up to 32,000 counts per logging interval, per channel.

The logger is used as part of a Tinytag Radio system that requires a receiver and the radio version of the Tinytag Explorer software.

After the installation of the software and the configuration of the receiver, the logger is turned on and will establish itself as part of the mesh network the system creates.

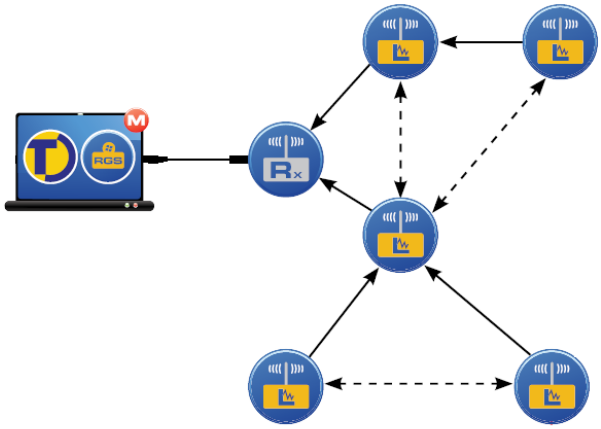

The typical range of the logger on a clear line of sight is 200m.

The logger is then set to record at a user-defined logging interval, anything from once every 2 minutes to once every 10 days. At the end of every logging interval, the logger will transmit the number of counts it has recorded during that period.

The data recorded by the logger is stored on the computer running the system by a Windows service (called the radio gateway) and this is then viewed across a LAN or the Internet through the Tinytag Explorer software.

If a logger cannot communicate with the mesh network for any reason, it will record locally until communications are restored.

The logger can be programmed with alarms. Warning e-mails can be sent when the limits entered are exceeded.

Data recorded by the system can be viewed as a graph or as a table of readings. There are also summary views containing information about the recording run and a daily min/max view.

Data from multiple devices recording at the same time can be combined into a single graph using Tinytag Explorer.

Data can be exported from the software as a graph image, for use in report writing, or as a data table, for further analysis in third-party spreadsheet programs.

### Features

| | |
|---|---|
| **Logging Interval** | 2 minutes to 10 days |
| **Off-line storage Capacity*** | 2 weeks typical, at a 10 minute logging interval |

Data loggers can be set to record in intervals of once every 2 minutes or greater (by default the logging interval is set to once every 10 minutes).

When radio communications are good, data is transmitted immediately and stored by the gateway service.

When communications with the gateway service are interrupted, by a power failure to the computer running the gateway service or an obstacle causing a blockage in radio communications, data loggers will record locally and then transmit data when communications are restored.

The off-line storage capacity of a data logger, for any given logging interval, is stated at the bottom of the configuration page in the Tinytag Explorer software when the logger is programmed (this will be a minimum of 2 weeks when set to record at the default 10 minute logging interval).

*The local storage capacity of the logger is an indication of how much data the unit can record when it is unable to communicate with a receiver.

| | |
|---|---|
| **Alarms** | 2 fully programmable, latching alarms |
| **Alarm Delay** | 1 second to 10 days |

Loggers can be programmed with alarm limits that will cause warnings to be shown in Tinytag Explorer and to make the unit's LED flash red.

Two alarm limits can be programmed per channel, allowing upper and lower boundaries to be set.

Delays can be set on the alarms so that routine tasks, such as restocking a fridge of freezer, can be performed without causing alarms to be activated.

E-mail warnings can be sent when alarm limits are breached, and these in turn can be used to send SMS messages using third party messaging services.

### Radio Specification

| | | |
|---|---|---|
| **Radio Frequency** | **EU** | 869.88MHz (-A part numbers) |
| | **AUS** | 917.8MHz (-B part numbers) |
| **Radio Power** | **EU** | <5mW (-A part numbers) |
| | **AUS** | <3mW (-B part numbers) |
| **Radio Range** | | 200m, typical (line of sight) |
| **Radio License** | | SRD licence-free |

The logger uses FSK modulation, with +/-32 kHz deviation.

These frequencies will easily penetrate most internal walls, but the range may be reduced to between 30% and 80% (however it will sometimes be increased, maybe up to double the nominal range, due to reflections off walls and roofs etc.).

Although the radio waves cannot penetrate a metal wall (fridges or corrugated iron sheds etc.) the signal will often still get through gaps around door seals, windows and air vents etc.

These frequencies are very slightly absorbed by water. Wet walls are not a problem, but the signal will not get through a room filled with shelves full of fruit or bottled water, for example.

The advantage of the mesh network is that loggers in locations with shorter ranges will often be able to relay data though other loggers that are able to transmit further.

# TGRF-4904

## Tinytag Plus Radio Four Input Count Data Logger (0 to 32,000 counts per interval) x 4

## Reading Specification

### Temperature

| | |
|---|---|
| **Reading Range** | 0 to 32,767 counts per logging interval (x4) |
| **Maximum Frequency** | 250 Counts/Second |
| **Input Type** | Digital or Volt-Free Contact Switch |

**Digital Input**

| | |
|---|---|
| **Low Level** | -0.3V to +0.3V |
| **High Level** | 2V to 10V |
| **Min. Pulse Width** | 150µs |
| **Min. Pulse Separation** | 2ms |
| **Edge Detection** | High-Low transition |

**Contact Input**

| | |
|---|---|
| **Type** | Normally open (with minimal de-bounce) |
| **Min. Closed Time** | 150µs |
| **Min. Open Time** | 1ms |
| **Edge Detection** | Open to Closed |

## Warnings

- **This logger should only be connected to the inputs specified above, otherwise damage to the logger may occur.**
- **Do not connect to voltages greater than 25V relative to earth or isolated supplies larger than 25V.**

## Connections

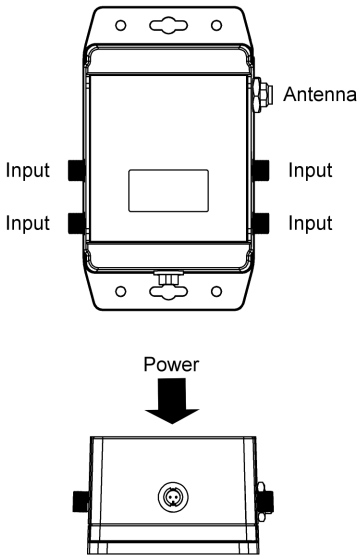


This logger can be used with a CAB-3246 Tinytag Current/Millivolt/Count Input Lead (supplied) or an ACS-9700 2-Pin Plug.

The connection details for the cable and plug are as follows:

| CAB-3246 | 2-Pin Plug | Function |
|---|---|---|
| Blue | A | Common/0V |
| Red | B | Signal Input |

## Physical Specification

| | |
|---|---|
| **IP Rating** | IP67 |
| **Operational Range*** | -20℃ to +55℃ |
| **Case Dimensions (excluding antenna)** | |
| **Length/Height** | 241mm / 9.49" |
| **Width** | 155mm / 6.10" |
| **Depth** | 62mm / 2.44" |
| **Weight (inc. antenna)** | 564g / 19.89oz |

*The Operational Range indicates the physical limits to which the unit can be exposed.

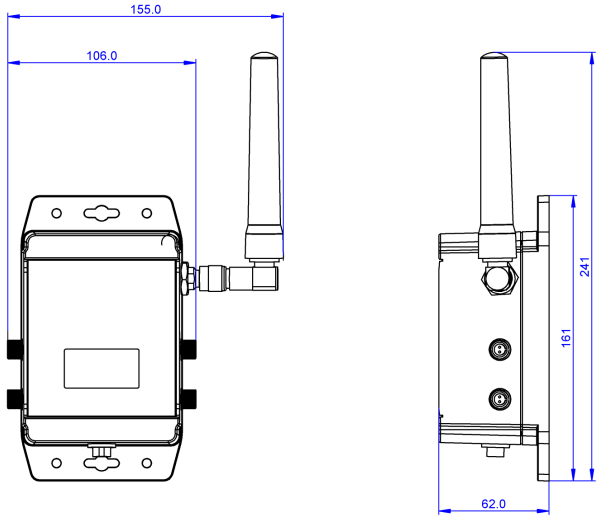


### Mounting/Positioning Instructions

The logger can be wall mounted or placed on its back on a flat surface, such as a shelf.

The logger's back-plate has mounting holes, as shown.

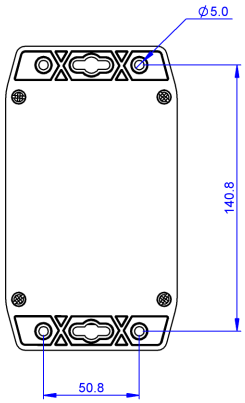


The logger can also be positioned on a non-conductive flat surface, such as a desk or a shelf, with its antenna positioned vertically, with no loss of performance.

# Tinytag Plus Radio Four Input Count Data Logger (0 to 32,000 counts per interval) x 4

## Power Information

### Battery Power

| | |
|---|---|
| **Battery Type** | 2 x Duracell Industrial ID1400 C (LR14) 1.5V (supplied) |

The logger will operate with other C cell batteries but performance cannot be guaranteed.

| | |
|---|---|
| **Battery Life** | Typically 12 months |

When the logger's batteries start to run flat, a low battery warning will be displayed in the Tinytag Explorer software and the LED on the front of the logger will flash red. The low battery warnings will start to flash when the logger has approximately two weeks of battery power remaining.

Before replacing batteries the logger must be turned off.

Alkaline batteries should always be replaced in pairs.

Data stored in the radio system will be retained after batteries are replaced.

**A lithium battery powered version of the logger is also available, that provides a wider working temperature range and a longer battery life. Please contact your supplier for further details.**

### Mains Power

The logger can also be powered from the mains using a plug-in power supply.

If the power supply is interrupted, the logger's batteries will power the logger and continue recording until the supply is restored.

**Note: This logger should only be used with an ACS-0044 Tinytag Plus Radio power supply.**

## Warranty

This product carries a manufacturing defects warranty of 12 months from the date of purchase. Units returned under warranty will be repaired or replaced at the manufacturer's discretion. This warranty does not cover mishandling, modification or battery replacement and is subject to our standard Terms and Conditions of Sale, a copy of which can be found at **www.tinytag.info**.

## Approvals

Gemini Data Loggers (UK) Limited hereby declares that this radio data logger is in compliance with the essential requirements and other relevant provisions of Directive 1999/5/EC. A copy of the declaration of conformity is available upon request.

The radio system also complies with EN 300 220:V2.4.1 2012-05 and EN 301 489-3 (-A EU version) and AS/NZS 4268:2012 (-B AUS version).

This logger also conforms to the following EMC standards:
EN 55032:2012; EN 61326-1:2013; EN 301 489-1:V1.9.2 & EN 301 489-3:V1.6.1.

Gemini Data Loggers (UK) Ltd. operates a Business Management System which conforms to ISO 9001 and ISO 14001.

## Required and Related Products

### Required Parts

This data logger forms part of a Tinytag Radio system and cannot be used as a standalone device.

To use this data logger you will require a radio receiver and a radio enabled version of the Tinytag Explorer software. These are supplied together in a pack, as follows:

**ACSRF-4040-PK** Plus Radio Ethernet receiver & software pack

for connecting to the computer running the radio system directly across a LAN.

Or

**ACSRF-4030-PK** Plus Radio USB receiver & software pack

for connecting directly to the computer running the radio system using a USB port.

### Connections

You will also require four of the following:

**CAB-3246** Tinytag Current/Millivolt/Count Input Lead (supplied) or a
**ACS-9700** 2-Pin Plug

### Further Related Products

**ACS-0044** Tinytag Plus Radio power supply