Emergency Light Fittings for Fluorescent Lamps

Series ECOLUX 6608

09379E00

- For fluorescent lamps 2 x 18 W and 2 x 36 W
- For emergency light operation periods of 1.5 or 3 hrs
- During emergency time: If emergency lamp broken changing to the other lamp
- Battery case which can be opened separately for easy change of batteries by means of plug-type contacts
- Enclosure closed by means of quick-action locks

The single-battery-supplied emergency lamps of the Series ECOLUX 6608 lighting are employable as safety lighting in accordance EN 60598.

	ATEX/IECEx					
Zone	0	1	2	20	21	22
For use in			x		x	x

	NEC 505			NEC 506		
	Class I					
Zone	0	1	2	20	21	22
For use in			x			

	NEC 500					
	Class I		Class II		Class III	
Division	1	2	1	2	1	2
For use in		x	x	x	x	x

WebCode 6608B

Emergency Light Fittings for Fluorescent Lamps
Series ECOLUX 6608

Selection Table

Version	Lamps	Lamp activation	Order number	Weight kg
ECOLUX 6608 Zone 2, 21, 22	2 x 18 W	2-channel	**6608/522-9..1-7247**	6.500
	2 x 36 W	2-channel	**6608/542-9..1-7247**	8.000

Order Number Supplement

Through wiring	without (standard)	**6608/...-.0..-....**	
	Special: With 6-cores	**6608/...-.6..-....**	
Cable entries	Standard: M25 x 1.5 1 Cable gland 2 Stopping plugs	**6608/...-..1.-....**	
	Special M20 or M25 of moulded material or metal to be specified with order	**6608/...-..9.-....**	
Note	The lights are delivered without fluorescent lamps and assembly parts. These parts must be ordered separately!		

Explosion protection

Explosion protection	
Global (IECEx)	
Gas and dust	IECEx BVS 11.0032X EX nA IIC T4 Gc or EX nAc IIC T4 Ex tb IIIC T90°C Db or Ex tb IIIC T90°C Ex tc IIIC T90°C DC or Ex tc IIIC T90°C
Europe (ATEX)	
Gas	BVS 03 E 093 X Ⓔx II 3 G Ex nA IIC T4 Gc or Ⓔx II 3 G Ex nAc IIC T4
Dust	BVS 03 ATEX E 094 X Ⓔx II 2D Ex tb IIIC T90°C Db or Ⓔx II 2D Ex tb IIIC T90°C * T90 °C = max. surface temperature referred to 18 W, 36 W; Ta = + 40 °C
Certifications and certificates	
Certificates	ATEX, IECEx, United Staates of America (FM), Canada (CSA), Belarus (operating licence)

Technical Data

Electrical data		
Rated voltage	220 V ... 254 V; 50/60 Hz for lamps acc EN60081 110 V ... 127 V; 50/60 Hz for lamps acc EN60081 120V; 50/60 Hz for lamps acc ANSI (IECEx only)	
Disconnection of the light	Optionally	
	when opening the lamp cover	when opening the locking mechanism on one of the quick-action locks, all poles of the voltage supply to the ballast are disconnected; contacts of the switching element with positive break, they are switched on again as soon as the lamp cover and the quick-action lock are closed.
	in case of a lamp fault	in case of a lamp fault, the electronic ballast disconnects the defective lamp from the power supply.
Luminous Characteristics		
Lamps	2 x 17/18 W	2 x 32/36 W
Lamp version	2-lamp	2-lamp
	without auxiliary reflector	with auxiliary reflector
Class according to LitG	B21	B31

Technical Data	
Measures for light guidance	Standard Broad reflective, internal reflector of light fitting painted white. Colour: Signal white RAL 9003; lateral glare is limited by the lamp diffuser cover. Special Auxiliary reflector (easily mountable), narrow-angle / wide-angle shining, aluminium anodised and polished.
Ambient conditions	
Standard operation	- 20 ... + 50 °C
Battery operated	- 5 ... + 50 °C charge - 20 ... + 50 °C discharge
Mechanical data	
Degree of protection	IP66 (IP64 with Breather 8162)
Protection class	I (with internal PE connection)
Material	
Enclosure	Polyester resin, glass fibre reinforced, colour white, similar to RAL 9010
Lamp cover	Polycarbonate, shock-resistant, as an option an aromatic-resistant paint can be used
Seal	Silicone foam gasket in the lamp cover
Quick-acting locks	Polyamide, glass fibre reinforced
Assembly parts	Polyester resin, glass fibre reinforced, white, similar to RAL 9010
Cover options	Quick-acting locks to be opened by means of a screwdriver; lamp cover is equipped with a hinge
Assembly / Installation	
Cable glands	Connection side: 1 cable gland M25 x 1.5 and 1 stopping plug M25 x 1.5 Opposite side: 1 stopping plug M25 x 1.5 (cable glands enclosed) Entry parts in moulded plastic (8161/8290): M20 Metal glands: M20, M25, Metal cable gland earthing via metal adapter plates
Connection option	Terminals L1, L2, L3, N, PE, L' (switched phase) 2.5 mm^2 fine / single wire L1 = charging phase, must not be switched
Through wiring	Lights available with internal through wiring, 6 wires; Cross-section 2.5 mm^2 for max. 16 A only possible for 36 W
Battery set	
Version	NiCd battery, gas-tight, the battery housing mounted on the lamp
Capacity	7 Ah
Operating voltage	6 V
Replacing the battery set	Open the battery housing; After loosening one of the plug contacts, the battery unit can be removed from the housing.
Emergency light electronics	
Operating modes	Maintained operation, stand-by operation, emergency blocking
Battery charge	intelligent battery management system, microprocessor-based (on-load time of max. 14 h) deep-discharging protection to the avoidance of cell pol reversal
Emergency light mode	During emergency light operation only one more lamp is operated. This results in reduced lighting power (see emergency light operation time)
Emergency light service time	Battery capacity / Emergency light operation time / Emergency light power: 17/18 W light fitting / 32/36 W light fitting 7 Ah / 1.5 h / 100 % / 60 % 3 h / 60 % / 30 %
Switchover voltage	from mains to battery operation for $U < 0.74 \times U_N$ from battery to mains operation for $U > 0.80 \times U_N$
Test functions	
Functional test	Check the emergency light function once a week. First test 1 hour after commissioning. During the first test, both lamps are switched on for 1 minute and the battery is charged with the rated current. Battery error and lamp fault are detected and indicated by means of the LED.
Light duration test of the emergency lighting	Test of the battery capacity in time intervals of 12 months; operation of the device in the emergency light mode during 2/3 of rated operation time. If the light is switched off by the discharge protection before the time has elapsed, the battery cannot be used for the emergency mode. The red LED indicates the error.

Technical Data

Function indicators

1 LED red and 1 LED green,
incorporated in reflector; can be seen from outside throught cover

LED	Indication		Function
Green	On		Light fitting okay; charging current is supplied
	Blinking		Light fitting okay; function test or continous on test is running
Red	On		Battery error; not connection to the battery or battery completely discharged
	Blinking		Battery error; battery has not enough capacity
	Flashing	1:10	Lamp error; lamp is out of order or lamp is end of life
Green / Red	Blinking		Emergency light function is jam by external switch
Blinking	1 s ON 1 s OFF		
Flashing	0.25 s ON 1.75 s OFF		

Operating modes

bei der Auslieferung ist die Leuchte in Dauerschaltung verdrahtet; durch Lösen der Brücke über den Klemmen 9 und 10 der Notlichtelektronik und Anschluss eines Fernschalters F wird die Leuchte auf Dauerschaltung mit schaltbarer Notlichtblockierung umgestellt.

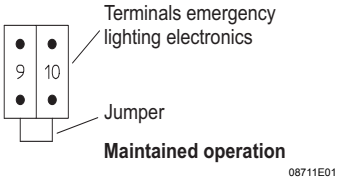

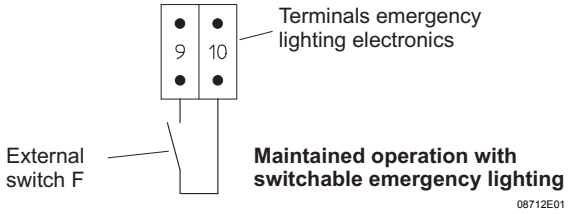

Funktionsbeschreibung

Dauerschaltung
bei Netzausfall der Allgemeinbeleuchtung wird die Leuchte grundsätzlich aus der Batterie gespeist, unabhängig von der Schaltstellung des Lichtschalters.

Dauerschaltung mit schaltbarer Notlichtblockierung
bei Ausfall der Stromversorgung für die Allgemeinbeleuchtung schaltet die Leuchte nur dann auf Notlichtbetrieb, wenn der Fernschalter F geschlossen ist. Über den Fernschalter wird das Notlicht zentral auf "betriebsbereit" oder "nicht betriebsbereit" geschaltet, z. B. in Abhängigkeit von Anlagen-Betriebszeiten; die Fernschaltung erfolgt über einen externen Schalter mit einem potentialfreien Kontakt.

Pro Fernschalter können maximal 30 Leuchten in einer linienförmiger Verdrahtung oder 50 Leuchten in sternförmiger Verdrahtung angeschlossen werden. Dabei darf die Leitungslänge 500 m nicht überschreiten. Mindestquerschnitt der Leitung 1,5 mm^2

E2

Accessories and Spare Parts

Designation	Illustration	Description	Art. no.	Weight kg
Fluorescent lamp	04936E00	Two-pin cap Ø 26 mm Light colour: universal white		0.000
		18 W 1350 lm	**108952**	0.100
		36 W 3350 lm	**108951**	0.200
		58 W 5200 lm	**108950**	0.220
Diffuser cover	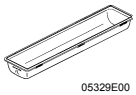 05329E00	for lamp 18 / 20 W	**124635**	0.500
		for lamp 36 / 40 W	**124646**	1.300
		for lamp 58 / 65 W	**124657**	1.000
Switch	10809E00	Switching element 8080/1-3-L, 2 normally closed contacts	**132527**	0.025
Lamp-holder	05888E00	Lamp holder for two-pin cap lamps G 13	**107275**	0.008
Mounting rail	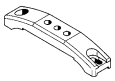 05895E00	for a variable mounting distance of 1 pair	**124894**	0.210
Mounting clamp bracket	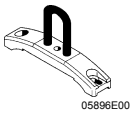 05896E00	Mounting bracket mounted on the mounting rail for a variable mounting distance of 1 pair	**124901**	0.300
M8 ring bolts	05378E00	M8, direct mounting in insert nuts, 1 pair	**115736**	0.120
Wall-mounting bracket	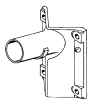 05460E00	to mount the lamps as side-entry lamps using a tube with a length of 1300 mm, Ø 42 mm		0.000
		(for pipe clamp R 1$^1/_2$“)	**109281**	6.000
Ceiling mounting bracket	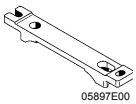 05897E00	for ceiling suspension of the lamp, 1 pair	**124908**	0.230
Pipe clamps	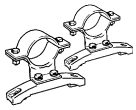 09402E00	with mounting rail for a variable mounting distance; Material: stainless steel		0.000
		R 1$^1/_4$“ (Ø 42 mm)	**124913**	1.140
		R 1$^1/_2$“ (Ø 48 mm)	**124891**	1.160
		R 2“ (Ø 60 mm)	**124898**	1.300
Mounting set ,,Grid cable rack”	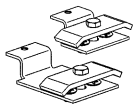 04361E00	for grid cable racks, with a cable diameter of 6 mm; with mounting rail for a variable mounting distance; Material: stainless steel	**124905**	1.560
Ceiling and wall-mounting bracket	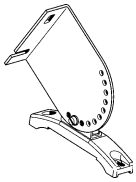 05898E00	mounted on a mounting rail for a variable mounting distance; Material: stainless steel Lamp can be swiveled in steps of 15°		0.000
		1 pair	**124910**	1.150

Emergency Light Fittings for Fluorescent Lamps
Series ECOLUX 6608

Accessories and Spare Parts

Designation	Illustration	Description			Art. no.	Weight kg
Adapter plates	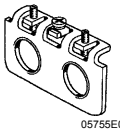 05755E00	for earth continuity when using metal glands;				0.000
		1 x M20 x 1.5		1 piece	**115815**	0.070
		1 x M25 x 1.5		1 piece	**115818**	0.070
		1 x NPSM $^1/_2$“		1 piece	**115821**	0.070
		1 x NPT $^3/_4$“		1 piece	**115824**	0.070
		2 x M20 x 1.5		1 piece	**115826**	0.060
		2 x M25 x 1.5		1 piece	**115828**	0.060
		2 x NPSM $^1/_2$“		1 piece	**115829**	0.060
Battery unit	10321E00	NiCd-battery for 6608/5	7 Ah / 6 V	1 pc	**118017**	1.150
Reflectors	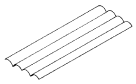 05324E00	for later installation, broad deep beam				0.000
		for lights with two lamps 18 W			**117098**	0.265
		for lights with two lamps 36 W			**117115**	0.234
Cable gland	05864E00	of moulded material, series 8161				0.000
		8161/5-M20-13		1 piece	**138518**	0.012
		8161/5-M20-13		50 pieces	**138454**	0.600
		8161/5-M25-17			**138520**	0.020
		8161/5-M25-17		50 pieces	**138456**	1.000
Stopping plug	04840E00	of moulded material, series 8290				0.000
		8290/3-M20	1 piece		**143522**	0.005
		8290/3-M20		100 pieces	**143543**	0.500
		8290/3-M25			**143524**	0.007
		8290/3-M25		100 pieces	**143544**	0.700
Breathing gland	05703E00	for installation in lights; in moulded material; without counter nut				0.000
		Thread:	M25 x 1.5	1 pc	**138573**	0.010
		Thread:	M25 x 1.5	20 pcs	**138576**	0.200

Dimensional Drawings (All Dimensions in mm) - Subject to Alterations

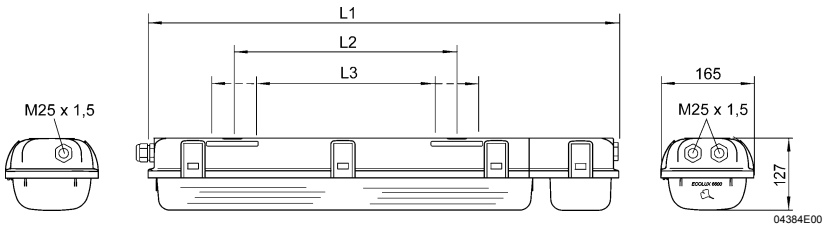

Dimensions	Light fitting	
	17/18 W	32/36 W
L1	830	1440
L2 1)	400	800
L3 2)	340 ... 460	680 ... 920

1) Fixed mounting distance
2) Variable mounting distance

Emergency light fittings ECOLUX 6608, 18 W, 36 W

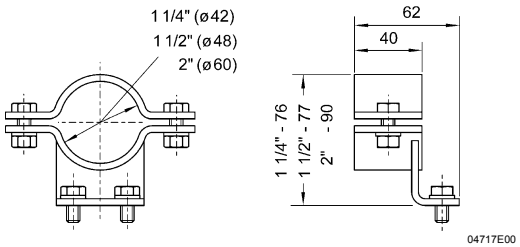

Pipe clamp

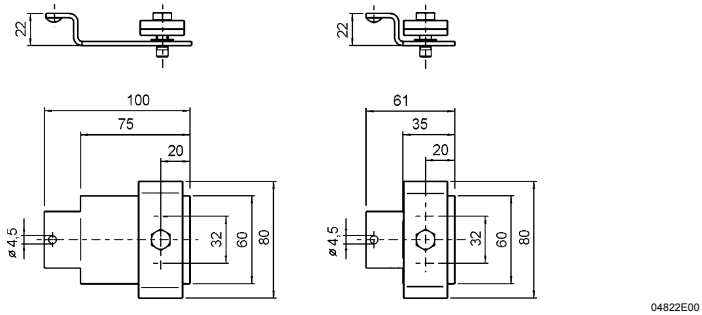

Mounting set grid cable rack

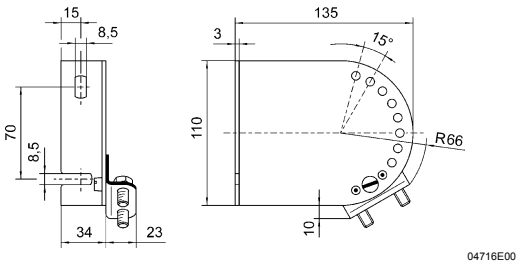

Ceiling- and wall-mounting bracket

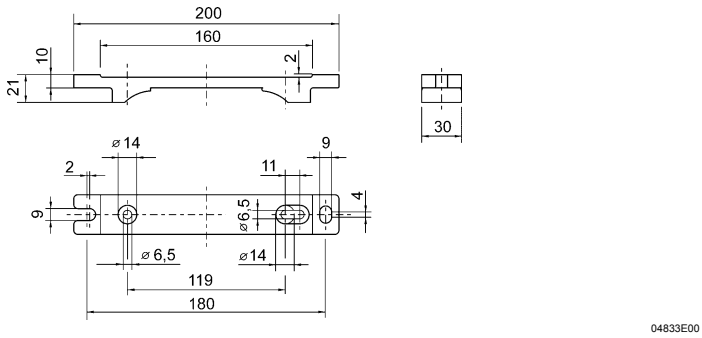

Ceiling mounting bracket

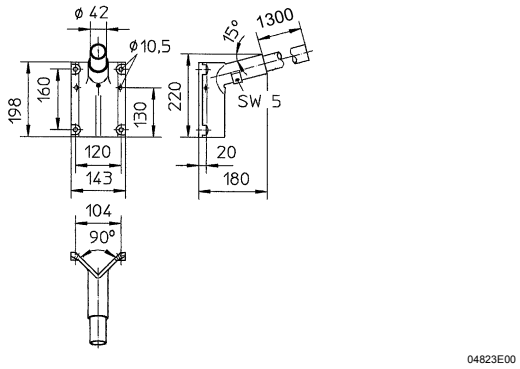

Wall mounting bracket for pole-mounting version

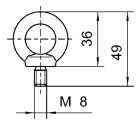

Ring bolt

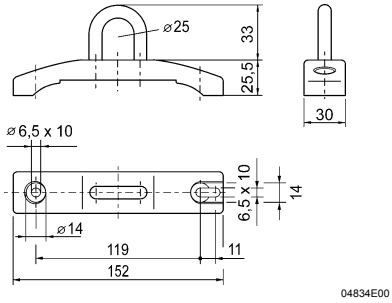

Mounting clamp bracket

Installation accessories

We reserve the right to make alterations to the technical data, dimensions, weights, designs and products available without notice. The illustrations cannot be considered binding.